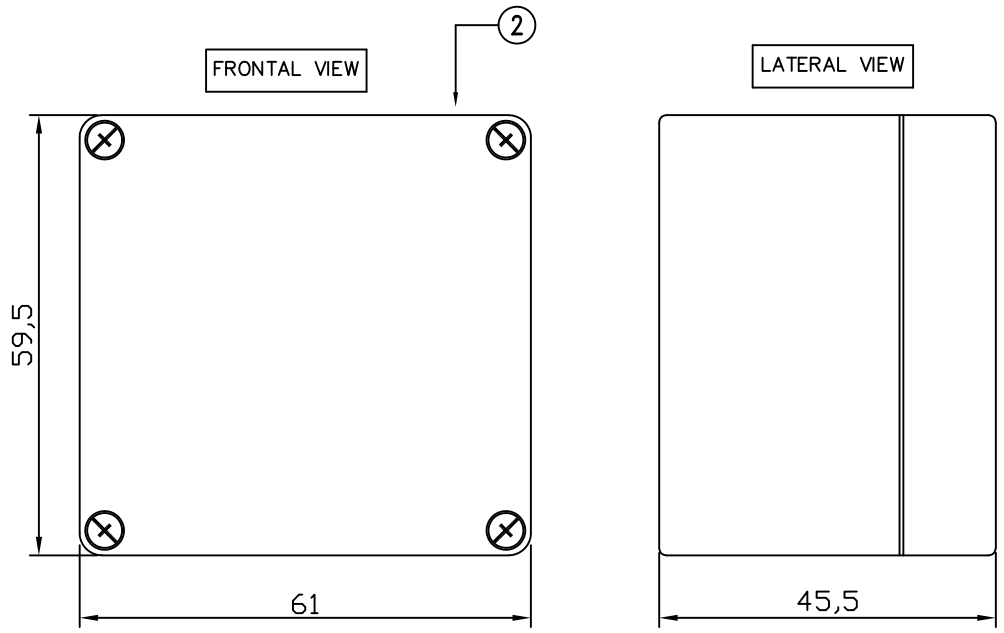

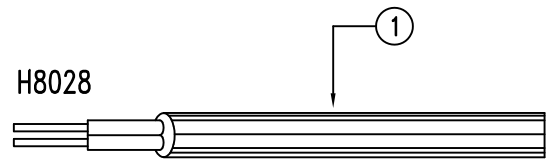

SUPPORT CLIP (OPEN VIEW)

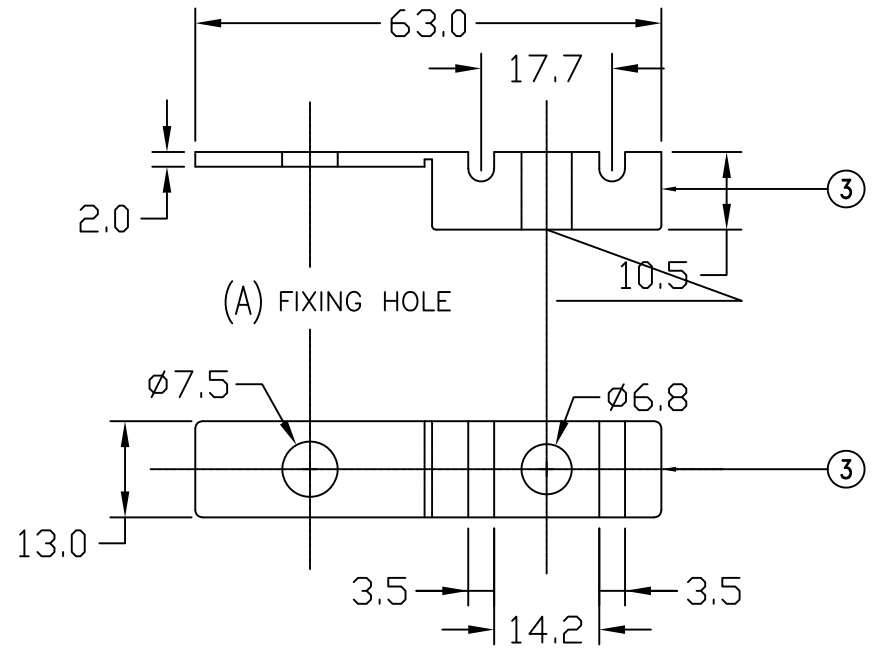

FIXING HOLES

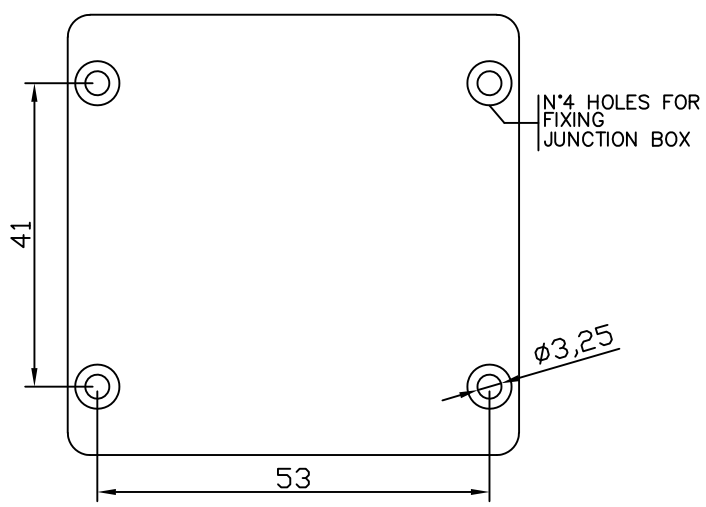

SUPPORT CLIP (MOUNTED VIEW)

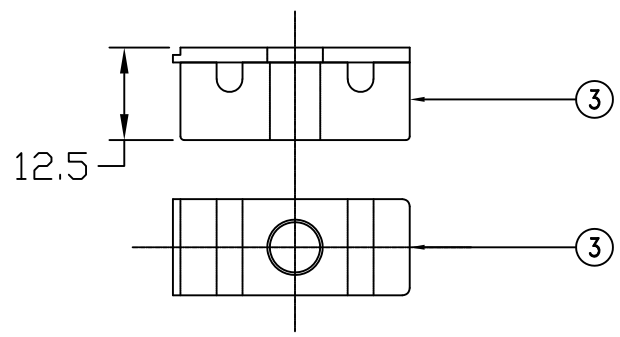

MECHANICAL & ELECTRICAL SPECIFICATION

TYPE OF SENSOR : TEMPERATURE SENSITIVE CABLE
CABLE APPROVAL : FM APPROVED
CABLE CERTIFICATE : JI OF5A0AY (3220)
OPERATING AMBIENT : −65°C TO +200°C
CABLES : TINNED COPPER COVERED STEEL
CONDUCTOR ø : 0.9 mm
MAX CONDUCTOR RES. (per Km at 20°C) : 100 Ohms
VOLTAGE RATING : 100 VDC
INSULATION MATERIAL : TEMPERATURE SENSITIVE TO 1.55 mm THICKNESS

JUNCTION BOX MATERIAL:POLYESTER RINFORCED
CERTIFICATION: Ex II 2G EEx eII

TERMINAL BLOCK MATERIAL: POLIAMMIDE BLUE
CERTIFICATION: Ex II 2GD EExe

CABLE GLAND PG9 MATERIAL: POLIAMMIDE BLUE
CERTIFICATION: II 2 GD EExe

JUNCTION BOX MOD. : 07-5185-1221/2090
CERT. PTB 01 ATEX 1014 U

** THE CLIPS WILL BE CONNECTED TO SUPPORT THROUGH THE FIXED HOLE (A)

FOR DETAIL OF THE JUNCTION BOX SEE NEXT SHEET

FRANCAISE/ *CABLE DATA*		
FR. *CODE*	FRANCAISE *RESPONSE TIME*	FRANCAISE *TEMPERAT. SET*
H8028	10 sec.	105°C

FRANCAISE/ *DIMENSION*			
FR. *CODE*	FRANCAISE *N° CABLE*	ø FRANC. *CABLE SIZE*	FRANCAISE *ø OVER COVERING*
H8028	2	1/0.90 mm	4.2 mm

ITEM	DESCRIPTION	SUPPLIER CODE/CODE DU FORNISSEUR
1	HEAT DETECTOR	H8028
2	EExe JUNCTION BOX	
3	HEAT DETECTOR SUPPORT CLIP	

NARFOAM KAR CO.

TITLE:
DEDLUGE SYSTEM
DATA SHEET
LINEAR HEAT DETECTOR

PROJECT : 4TH METHANOL PLANT

DRAWING NO.	PIDEC PROJECT NO.	SHEET	SCALE	SIZE	REV.
VD-3-647-011-2	1175	3 OF 4	NTS	A3	2