PRODUCT DATA SHEETS

V12/sro	2005-06-01	V12/lf	V12/di	2005-06-10	FI	FINAL ISSUE
V12/sro	2004-09-01	V12/lf	V12/di	2004-09-10		FIRST ISSUE
Name	Date	Name	Name	Date	Status	
Prepared, revised		Checked	Approved			Remark, kind of revision

Table of Contents

1 PRODUCT DATA SHEETS

Pages

Series 240

Pneumatic Control Valves Type 241-1 and Type 241-7
Globe Valve Type 241

ANSI version

Application

Control valve for process engineering and plants with industrial requirements

Nominal sizes	**½″ to 10″**
Nominal pressures	**ANSI Class 125 to 300**
Temperatures	**–320 °F to +800 °F (–196 °C to +427 °C)**
Standards	**ANSI, ASME and ASTM**

Conversion of valve sizing coefficients:
C_v (in US gallons/min) = 1.17 · K_{vs} (in m^3/h)
K_{vs} (in m^3/h) = 0.86 · C_v (in US gallons/min)

Type 241 Globe Valve with
- Type 3271 Pneumatic Actuator (Type 241-1 Control Valve)
- Type 3277 Pneumatic Actuator (Type 241-7 Control Valve) for integral positioner attachment

Valve body optionally made of
- Cast iron
- Carbon steel
- Stainless carbon steel according to ASTM specifications
- Forged steel or stainless forged steel
- Stainless carbon steel

Undivided valve bonnet up to nominal size 6″

Valve plug optionally with
- Metal sealing
- Soft sealing
- Lapped-in metal

Thanks to their modular design, the control valves can be equipped with different accessories:
Positioners, solenoid valves and other accessories according to (DIN) IEC 534-6 and NAMUR recommendation. Refer to Information Sheet T 8350 EN for details.

Versions

Standard version · For temperatures from 15 °F to 430 °F (–10 °C to +220 °C)
- **Type 241-1** (Fig. 1) · Nominal sizes ½″ to 10″ with Type 3271 Pneumatic Actuator (see Data Sheet T 8310 EN)
- **Type 241-7** (Figs. 2 and 4) · Nominal sizes ½″ to 6″, valve made of forged steel in size 3″, with Type 3277 Pneumatic Actuator for integral positioner attachment (see T 8311 EN)

Additional versions with
- **NPT threaded connections** (Fig. 3) · ½″ to 2″, Class 250
- **Adjustable packing** · On request
- **Flow divider** for noise reduction · See T 8081 EN
- **Insulating section or bellows seal** · See "Technical data"
- **Heating jacket** · On request
- **Additional handwheel** · See Data Sheet T 8310 EN
- **Dimensions according to DIN** · See Data Sheet T 8015 EN
- **Dimensions acc. to Japanese standards** (JIS) · On request
- **Typetested version** · See Data Sheets T 8016 EN, T 8020 EN and T 8022 EN

Fig. 1 · Type 241-1, sizes ½″ to 10″

Fig. 2 · Type 241-7, sizes ½″ to 6″

Fig. 3 · Type 241-1 with NPT thread

Fig. 4 · Type 241-7, sizes ½″ to 3″, forged steel version

Associated Information Sheet	**T 8000 EN**	**Edition November 2002**	
Associated Data Sheets for pneumatic actuators	**T 8310 EN, T 8311 EN**	**Data Sheet**	**T 8012 EN**

Fail-safe action

Depending on the arrangement of the compression springs in the actuator (details in Date Sheets T 8310 EN and T 8311 EN), the control valve offers two fail-safe actions which become effective upon a supply air failure.

"Actuator stem extends" (fail-close)
The actuator springs close the valve when the supply air fails.

"Actuator stem restracts" (fail-open)
The actuator springs open the valve when the supply air fails.

Notes on the differential pressure tables 4a to 5d

The differential pressure tables were prepared under the following conditions:

- For valves in nominal sizes ½" to 3" and actuators with an effective area of 700 cm^2, the max. permissible supply pressure is 4 bar.
- Process medium flow directed against the closing direction of the valve plug
- Version with PTFE stuffing box
- The leakage rates specified in Table 1 are not exceeded for the max. differential pressures listed.
- The specified differential pressure can be limited by the values given in the pressure-temperature diagram.

For versions with metal bellows seal and $p_2 \neq 0$ psi, the sizing of the actuator needs to be checked separately.

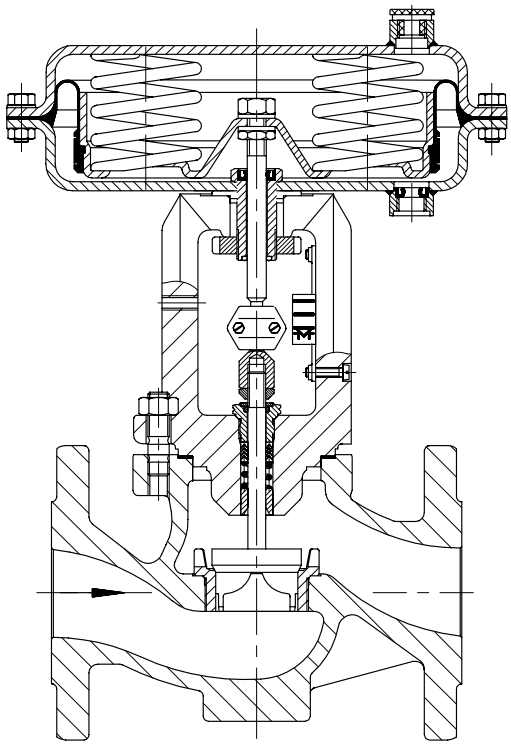

Fig. 4 · Type 241 Globe Valve, sizes ½" to 6" with Type 3271 Pneumatic Actuator

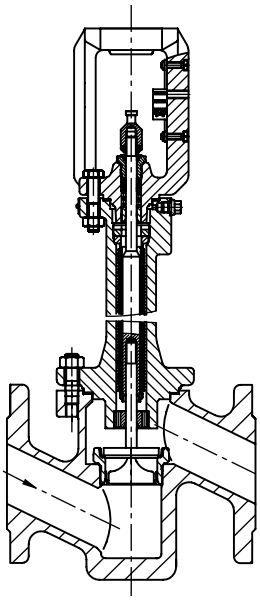

Fig. 5 · Type 241 Globe Valve, sizes ½" to 3" Forged steel version with metal bellows seal

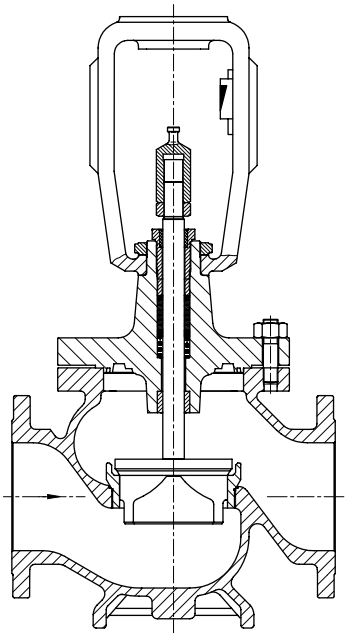

Fig. 6 · Type 241 Globe Valve, sizes 8" to 10"

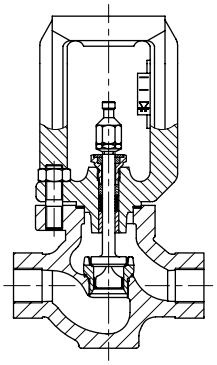

Fig. 7 · Type 241 Globe Valve, sizes ½" to 2" with NPT thread

Table 1 · Technical data

Nominal size in			1″ ... 6″	½″ ... 2″	½″ ... 10″	½, 1, 1½, 2, 3	½″ ... 10″	½, 1, 1½, 2, 3
ASTM material			A 126 B		A 216 WCC	A 105	A 351 CF8M	A 182 F316
Type of connection			Flange	Thread	Flange		Flange	
Form of connection			FF	NPT	RF [1]		RF [1]	
Nominal pressure ANSI Class			125	250	150/300	300	150/300	300
Seat/plug sealing			Metal sealing, soft sealing or lapped-in metal					
Characteristic			Equal percentage or linear					
Rangeability			50:1 for ½″ ... 2″ · 30:1 for 2½″ ... 10″					
Temperature ranges °C (°F) · Perm. operating pressures according to the pressure-temperature diagram (see Information Sheet T 8000-2 EN)								
Body without insulating section			–10 ... 220 °C (15 ... 430 °F)					
Body with	Insulating section	Short	–29 ... 230 °C (–20 ... 445 °F)		–29 ... 427 °C (–20 ... 800 °F)		–50 ... 427 °C (–58 ... 800 °F)	
		Long	–		–		–198 ... 427 °C (–325 ... 800 °F)	
	Bellows seal	Short	–29 ... 230 °C (–20 ... 445 °F)		–29 ... 427 °C (–20 ... 800 °F)		–50 ... 427 °C (–58 ... 800 °F)	
		Long	–		–		–198 ... 427 °C (–325 ... 800 °F)	
Valve plug	Standard	Metal sealing	–196 ... 450 °C (–325 ... 840 °F)					
		Soft sealing	–196 ... 220 °C (–325 ... 428 °F)					
	Balanced	With PTFE ring	–196 ... 220 °C (–325 ... 428 °F)					
		With graph. ring[2]	+220 ... 450 °C (+430 ... 800 °F)					
Leakage class according to DIN EN 1349								
Valve plug	Standard	Metal sealing	IV					
		Soft sealing	VI					
		Lapped-in metal	IV-S2 · For 4″ and larger: IV-S1					
	Balanced	Metal sealing	With PTFE ring: IV · With graphite ring: III					

1) Other versions on request

2) Special version, details on request

Table 2 · Materials (WN = material number according to DIN)

Standard version					
Valve body [1]	Cast iron A 126 B	Carbon steel A 216 WCC	Forged steel A 105	Stainless carbon steel A 351 CF8M	Stainless forged steel A 182 F316
Valve bonnet	A 105			A 182 F 316	
Seat and plug [2]	WN 1.4006			WN 1.4571	
	Sealing ring for soft sealing: PTFE with glass fiber				
	Sealing ring for balanced plug: PTFE with carbon				
Guide bushings	WN 1.4104			WN 1.4571	
Stuffing box packing [3]	PTFE V-ring packing with carbon · Spring: WN 1.4310				
Body gasket	Metal graphite				
Insulating section	A 105			A 182 F 316	
Metal bellows seal					
Intermediate piece	A 105			A 182 F 316	
Metal bellows	WN 1.4571				
Heating jacket	On request				

1) See pressure-temperature diagram, other materials on request

2) All seats and plugs with metal sealing also available with stellite facing; for nominal sizes ≤ 4″, plugs up to seat bore SB 48 are also available made of pure stellite.

3) Other packings available on request

Table 3 · C_v and K_{vs} values

Table 3a · Overview (with Flow Divider St I (C_v I, K_{vs} I) or St III (C_v III, K_{vs} III))

C_v		0.12	0.2	0.3	0.5	0.75	1.2	2	3	5	7.5	12	20	30	40	70	75	95	120	190	290	300	420	735
K_{vs}		0.1	0.16	0.25	0.4	0.63	1.0	1.6	2.5	4.0	6.3	10	16	25	35	60	63	80	100	160	250	260	360	630
C_v I		–						1.7	2.6	4.2	7	10.5	17	26	36	62	67	85	105	170	265	275	375	650
K_{vs} I		–						1.45	2.2	3.6	5.7	9	14.5	22	31	54	57	72	90	144	225	234	320	560
C_v III		–										9	–	23	30	–	55	–		140	220	–	315	–
K_{vs} III		–										7.5	–	20	26	–	47	–		120	190	–	270	–
Seat Ø D	in	0.12			0.24			0.47			0.945		1.22	1.5	1.9	2.48		3.15		3.94	4.92	5.12	5.91	7.87
	mm	3			6			12			24		31	38	48	63		80		100	125	130	150	200
Travel	in	0.59															1.18	0.59	1.18		2.36	1.18	2.36	
	mm	15															30	15	30		60	30	60	

Table 3b · Versions without flow divider · Versions in highlighted fields also available with balanced valve plugs

C_v		0.12	0.2	0.3	0.5	0.75	1.2	2	3	5	7.5	12	20	30	40	70	75	95	120	190	290	300	420	735
K_{vs}		0.1	0.16	0.25	0.4	0.63	1.0	1.6	2.5	4.0	6.3	10	16	25	35	60	63	80	100	160	250	260	360	630
in/mm																								
½	15	•	•	•	•	•	•	•	•	•														
¾	20	•	•	•	•	•	•	•	•	•	•													
1	25	•	•	•	•	•	•	•	•	•	•	•												
1½	40				•	•	•	•	•	•	•	•	•	•										
2	50				•	•	•	•	•	•	•	•	•	•	•									
2½	65													•	•	•								
3	80													•	•	•		•						
4	100																•		•	•				
6	150																•		•	•		•		
8	200																				•		•	•
10	250																				•		•	•

Table 3c · Versions with Flow Divider St I (C_vI/K_{vs}I) · Versions in highlighted fields also available with balanced valve plugs

C_vI		–						1.7	2.6	4.2	7	10.5	17	26	36	62	67	85	105	170	265	275	375	650
K_{vs}I		–						1.45	2.2	3.6	5.7	9	14.5	22	31	54	57	72	90	144	225	234	320	560
in/mm																								
½	15							•	•	•														
¾	20							•	•	•														
1	25							•	•	•														
1½	40										•	•	•	•										
2	50										•	•	•	•	•									
2½	65													•	•	•								
3	80													•	•	•		•						
4	100																•		•	•				
6	150																•			•		•		
8	200																				•		•	•
10	250																				•		•	•

Table 3d · Versions with Flow Divider St III (C_vIII/K_{vs}III) · Versions in highlighted fields also available with balanced valve plugs

C_vIII		–										9	–	23	30	–	55	–	–	140	220	–	315	–
K_{vs}III		–										7.5	–	20	26	–	47	–	–	120	190	–	270	–
in/mm																								
½	15																							
¾	20																							
1	25																							
1½	40																							
2	50											•												
2½	65													•	•									
3	80													•	•									
4	100																•							
6	150																•			•				
8	200																				•		•	
10	250																				•		•	

Terms for control valve sizing according to (DIN) IEC 534, Parts 2-1 and 2-2: $F_L = 0{,}95$, $x_T = 0{,}75$
Conversion of valve sizing coefficients: C_v (US gallons/min.) = 1.17 · K_{vs} (m^3/h); K_{vs} (in m^3/h) = 0.86 · C_v (in US gallons/min)

Table 4 · Differential pressure tables · Unbalanced valve plug

Values specified in the fields highlighted in gray correspond to the bench range, i.e. operation at rated travel · Differential pressures given in the white fields apply for maximally pretensioned springs · Values given in parenthesis apply for 50 % of travel

Observe the notes concerning the differential pressure tables in page 2.

Table 4a · Permissible differential pressures Δp · Pressures given in bar

For valve with fail-safe action "Actuator stem extends" · Valve closed at supply pressure 0 bar

Bench range (bar) for actuators (cm^2)		240	0.2...1.0	0.3...1.1	0.4...2.0 (1.2...2.0)	–	0.6...2.2	0.6...3.0[1] (1.8...3.0)	0.9...3.3	–	–	–
		120, 350, 700		0.4...1.2			0.8...2.4		1.2...3.6		1.4...2.3 (1.85...2.3)	2.1...3.3 (2.7...3.3)
		1400	–	–		0.5...2.5		–		1.0...3.0	–	–
		2800		0.8 ... 1.2	–	2.0 ... 3.0	1.6...2.4		2.4...3.6	–		
Required supply pressure (bar)			1.2	1.4	2.2	2.7	2.6	3.2	3.8	3.2	2.5	3.5
Size in	C_v	Actuator cm^2	Δp with p_2 = 0 bar									
½″ to 1″	0.12 to 0.3	120	22	–	49	–	–	–	–	–	–	–
		240	49	50	–	–	–	–	–	–	–	–
½″ to 2″	0.5 to 1.2	120	22	–	49	–	–	–	–	–	–	–
		240	49	50	50	–	–	–	–	–	–	–
	2	120	9	–	28	–	–	–	–	–	50	–
	3	240	28	47	50	–	50	50	50	–	–	–
	5	350	45	50	50	–	50	50	–	–	50	–
¾″ to 2″	7.5	120	–	–	5.5	–	–	–	–	–	30	46
		240	5.2	9.3	14.8	–	24	24	39	–	–	–
	12	350	10	24	24	–	38	38	50	–	50	50
		700	–	–	(50)	–	–	–	–	–	–	–
1½″ and 2″	20	120	–	–	3	–	–	–	–	–	18	28
		240	2.5	5.2	8.0	–	14	14	23	–	–	–
		350	5.2	13.5	13.5	–	30	22	47	–	50	50
		700	–	–	(50)	–	–	(50)	–	–	–	–
1½″ to 3″	30	120	–	–	1.5	–	–	–	–	–	12	19
		240	1.3	3.1	5.0	–	9.0	9.0	15	–	–	–
		350	3.1	8.5	8.5	–	20	14	31	–	37	50
		700	–	–	(50)	–	–	(50)	–	–	–	–
2″ to 3″	40	240	–	–	3.0	–	5.0	5.0	9.0	–	–	–
		350	1.6	5.0	5.0	–	12	8.5	19	–	23	35
		700	–	–	(40)	–	–	(50)	–	–	–	–
2½″ and 3″	70	240	–	–	1.4	–	2.8	2.8	5.0	–	–	–
		350	0.8	2.7	2.7	–	6.5	4.5	10.5	–	13	20
		700	–	–	(23)	–	–	(35)	–	–	(36)	(50)
3″	95	240	–	–	0.6	–	1.5	1.5	2.8	–	–	–
		350	–	1.4	1.4	–	4.0	2.7	6.5	–	8	12
		700	–	–	1.4	–	–	(21)	–	–	(22)	(33)
4″	75	700	2.6	6.5	6.5	–	15	10.5	23	–	27	41
4″	120	700	1.4	4.0	4.0	–	9.0	6.5	14	–	16.5	25
4″, 6″	190	700	0.7	2.3	2.3	–	5.5	4.0	8.5	–	10.5	15.5
6″	300	700	0.3	1.2	1.2	–	3.0	2.2	6.0	–	6.0	9.5
8″ and 10″	290	1400	–	3.4	3.4	4.4	7.5	–	–	9.6	–	–
		2800	–	15.8	–	40	32.4	–	48	–	–	–
	420	1400	–	2.3	2.3	3.0	5.1	–	–	6.6	–	–
		2800	–	10.8	–	28.2	22.4	–	33.9	–	–	–
	735	1400	–	–	–	1.6	2.8	–	–	3.6	–	–
		2800	–	6	–	15.8	12.5	–	19	–	–	–

[1] Not for actuators with an effective area of 120 cm^2

Table 4b · Permissible differential pressures Δp · Pressures given in psi
For valve with fail-safe action "Actuator stem extends" · Valve closed at supply pressure 0 psi

Bench range (psi) for actuators (cm^2)		240	3...15	4...17	6...30 (18...30)	–	9...32	9...44[1] (26...44)	13...48	–	–	–
		120, 350, 700		6...18			12...35		18...52		20...34 (26...34)	30...40 (39...50)
		1400	–	–		7...36		–		15...44	–	–
		2800		12 ... 18	–	30 ... 44	23...35	–	34...52	–		
Required supply pressure (psi)			18	21	33	39	38	47	55	47	38	55
Size in	C_v	Actuator cm^2	Δp with p_2 = 0 psi									
½″ to 1″	0.12 to 0.3	120	320	–	710	–	–	–	–	–	–	–
		240	710	725	–	–	–	–	–	–	–	–
½″ to 2″	0.5 to 1.2	120	320	–	710	–	–	–	–	–	–	–
		240	725	725	725	–	–	–	–	–	–	–
	2	120	130	–	405	–	–	–	–	–	725	–
	3	240	406	680	725	–	725	725	725	–	–	–
	5	350	650	725	725	–	725	725	–	–	725	–
¾″ to 2″	7.5	120	–	–	80	–	–	–	–	–	435	665
		240	75	135	215	–	350	350	565	–	–	–
	12	350	145	350	350	–	550	550	725	–	725	725
		700	–	–	(725)	–	–	–	–	–	–	–
1½″ and 2″	20	120	–	–	44	–	–	–	–	–	260	405
		240	36	75	115	–	200	200	335	–	–	–
		350	75	195	195	–	435	320	680	–	725	725
		700	–	–	(725)	–	–	(725)	–	–	–	–
1½″ to 3″	30	120	–	–	22	–	–	–	–	–	175	275
		240	19	45	72	–	130	130	218	–	–	–
		350	45	125	125	–	290	200	450	–	535	725
		700	–	–	(725)	–	–	(725)	–	–	–	–
2″ to 3″	40	240	–	–	43	–	72	72	130	–	–	–
		350	23	72	72	–	175	123	275	–	330	507
		700	–	–	(580)	–	–	(725)	–	–	–	–
2½″ and 3″	70	240	–	–	20	–	40	40	72	–	–	–
		350	12	39	39	–	94	65	152	–	190	290
		700	–	–	(333)	–	–	(507)	–	–	(520)	(725)
3″	95	240	–	–	9	–	22	22	40	–	–	–
		350	–	20	20	–	58	339	94	–	115	174
		700	–	–	20	–	–	(305)	–	–	(320)	(475)
4″	75	700	38	94	94	–	217	152	333	–	390	595
4″	120	700	20	58	58	–	130	94	203	–	239	362
4″, 6″	190	700	10	33	33	–	80	58	123	–	152	225
6″	300	700	4.4	17	17	–	43	32	85	–	85	135
8″ and 10″	290	1400	–	49	49	64	110	–	–	139	–	–
		2800	–	230	–	580	470	–	695	–	–	–
	420	1400	–	33	33	43	74	–	–	95	–	–
		2800	–	157	–	410	325	–	490	–	–	–
	735	1400	–	–	–	23	41	–	–	52	–	–
		2800	–	87	–	229	181	–	276	–	–	–

[1] Not for actuators with an effective area of 120 cm^2 (18.6″)

Tables 4c and 4d · Permissible differential pressures Δp
For valve with fail-safe action "Actuator stem retracts" · Valve closed at required differential pressure

			Table 4c · Pressures in **bar**			**Table 4d** · Pressures in **psi**		
Bench range (bar/psi) for actuator (cm^2)		120 ... 2800	0.2 ... 1.0			3 ... 15		
		1400	(0.4 ... 2.0)			(6 ... 30)		
		2800	(0.3 ... 1.1)			(4 ... 17)		
Required supply pressure (bar/psi)			1.2	2.4	4	18	36	58
Size in	C_v	Actuator cm^2	Δp with p_2 = 0 bar			Δp with p_2 = 0 psi		
½″ to 1″	0.12 to 0.3	120	23	50	–	330	725	–
		240	49	–	–	710	–	–
½″ to 2″	0.3 to 1.2	120	23	50	–	330	725	–
		240	49	50	–	710	725	–
	2	120	9	50	–	130	725	–
	3	240	28	50	–	410	725	–
	5	350	45	50	–	650	725	–
¾″ to 2″	7.5	120	0.6	31	50	10	450	725
		240	5.2	50	50	80	725	725
	12	350	10	50	50	145	725	725
		700	24	50	–	350	725	–
1½″ and 2″	20	120	–	18	40	–	260	580
		240	2.5	37	50	35	540	725
		350	5.2	50	50	75	725	725
		700	13.5	50	–	200	725	–
1½″ to 3″	30	120	–	11	28	–	160	410
		240	1.3	24	50	20	350	725
		350	3.1	37	50	45	540	725
		700	8.7	50	50	130	725	725
2″ to 3″	40	240	0.5	15	34	10	220	490
		350	1.6	23	50	25	330	725
		700	5.0	46	50	75	665	725
2½″ and 3″	70	240	–	8.5	20	–	120	290
		350	0.6	13	29	10	190	420
		700	2.7	27	50	40	390	725
3″	95	240	–	5.0	12	–	75	170
		350	0.2	7.8	18	5	110	260
		700	1.4	16	37	20	230	540
4″	75	700	2.6	27	50	40	390	725
4″	120	700	1.4	16	36	20	230	520
4″ and 6″	190	700	0.7	10	23	10	145	330
6″	300	700	0.3	6.0	13.5	5	85	200
8″ and 10″	290	1400	1.3	13.7	30.3	20	200	440
		2800	3.4	28.3	50	50	410	725
	420	1400	–	9.5	21.0	–	140	300
		2800	2.3	19.5	42	35	280	610
	735	1400	–	5.2	11.7	–	75	170
		2800	–	10.9	23.9	–	160	350

Table 5 · Differential pressure tables · Balanced plugs with metal sealing and PTFE ring

Values specified in the fields highlighted in gray correspond to the bench range, i.e. operation at rated travel · Differential pressures given in the white fields apply for maximally pretensioned springs

Fail-safe action "Actuator stem extends" · Valve closed at supply pressure 0 bar (0 psi)
Fail-safe action "Actuator stem retracts" · Valve closed at required supply pressure

Tables 5a and 5b · Permissible differential pressures Δp · Pressures given in bar

Table 5a · "Actuator stem extends"							Table 5b · "Actuator stem retracts"		
Bench range in bar			0.2...1.0	0.4...1.2	0.4...2.0	0.8...2.4	0.2...1.0	0.2...1.0	0.4...2.0
Required supply pressure in bar			1.2	1.4	2.2	2.6	1.2	2.0	3.0
Size in	C_v	Actuator cm^2	Δp with p_2 = 0 bar						
2½″	70	350	–	50	50	50	–	50	50
3″		700	50	50	–	–	50	–	–
3″	95	350	–	50	50	50	–	50	50
		700	50	50	–	–	50	–	–
4″	75	700	30	50	50	50	30	50	50
4″ 6″	190	700	–	50	50	50	12	50	50
6″	300	700	–	50	50	50	–	50	50

Tables 5c and 5d · Permissible differential pressures Δp · Pressures given in psi

Table 5c · "Actuator stem extends"							Table 5d · "Actuator stem retracts"		
Bench range in psi			3...15	6...18	6...30	12...36	3...15	3...15	6...30
Required supply pressure in psi			18	21	33	39	18	18	33
Size in	C_v	Actuator cm^2	Δp with p_2 = 0 psi						
2½″	70	350	–	725	725	725	–	725	725
3″		700	725	725	–	–	725	–	–
3″	95	350	–	725	725	725	–	725	725
		700	725	725	–	–	725	–	–
4″	75	700	440	725	725	725	440	725	725
4″ 6″	190	700	–	725	725	725	170	725	725
6″	300	700	–	725	725	725	–	725	725

Table 6 · Differential pressure tables · Valves with metal bellows seal and balanced plug with metal sealing and PTFE ring

Values specified in the fields highlighted in gray correspond to the bench range, i.e. operation at rated travel · Differential pressures given in the white fields apply for maximally pretensioned springs · Values given in parenthesis apply for 50 % of travel

Fail-safe action "Actuator stem extends" · Valve closed at supply pressure 0 bar (0 psi)
Fail-safe action "Actuator stem retracts" · Valve closed at required supply pressure

Tables 6a and 6b · Permissible differential pressures Δp · Pressures given in bar

Table 6a · "Actuator stem extends"									Table 6b · "Stem retracts"		
Bench range in bar			0.2...1.0	0.4...1.2	0.4...2.0 (1.2...2)	0.8...2.4	0.6...3.0	1.2...3.6	0.2...1.0	0.4...2.0	0.6...3.0
Required supply pressure in bar			1.2	1.4	2.2	2.6	3.2	3.8	1.2	3.0	4.0
Size in	C_v	Actuator cm^2	Δp with p_2 = 0 bar								
2½″	70	350	–	17	17	50	36	50	–	–	50
3″		700	17	50	(50)	–	–	–	17	50	–
3″	95	350	–	12	12	50	31	50	–	–	50
		700	12	50	(50)	–	–	–	12	50	–
4″	75	700	5.0	17	17	50	30	50	5,0	–	50
4″ 6″	190	700	–	14	14	38	26	50	1,5	–	50
6″	300	700	–	11	11	35	23	50	–	–	50

Tables 6c and 6d · Permissible differential pressures Δp · Pressures given in psi

Table 6c · "Actuator stem extends"									Table 6d · "Stem retracts"		
Bench range in psi			3...15	6...18	6...30 (18...30)	12...36	9...44	18...52	3...15	6...30	9...44
Required supply pressure in psi			18	21	33	39	47	55	18	44	60
Size in	C_v	Actuator cm^2	Δp with p_2 = 0 psi								
2½″	70	350	–	250	250	725	520	725	–	–	725
3″		700	250	725	(725)	–	–	–	250	725	–
3″	95	350	–	170	174	725	450	725	–	–	725
		700	170	725	(725)	–	–	–	170	725	–
4″	75	700	75	250	250	725	440	725	75	–	725
4″ 6″	190	700	–	200	200	550	380	725	20	–	725
6″	300	700	–	160	160	510	330	725	–	–	725

Table 7 · Dimensions for standard version of Type 241-1 and Type 241-7

Valve		in	½″	¾″	1″	1½″	2″	2½″	3″	4″	6″	8″	10″
		mm	15	20	25	40	50	65	80	100	150	200	250
		NPT	½	¾	1	1½	2	–					
Length L	Class 125 and 150	in	7.25	7.25	7.25	8.75	10.0	10.87	11.75	13.87	17.75	21.38	26.49
		mm	184	184	184	222	254	276	298	352	451	543	673
	Class 300	in	7.50	7.62	7.75	9.25	10.50	11.50	12.50	14.50	18.62	22.36	27.87
		mm	191	194	197	235	267	292	318	368	473	568	708
Length L1	Class 250	in	6	6	6	8	9.25	–					
		mm	152.4	152.4	152.4	203.2	235	–					
H1 for actuator	≤ 700 cm²	in	8.66					10.24		13.78	15.34	–	
		mm	220					260		350	390	–	
	1400 cm²	in	–									31.7	
		mm	–									805	
	2800 cm²	in	–									41.73	
		mm	–									1060	
H2 (approx.)		in	1,77			2.84		3.86		4.45	6.89	9.25	10.24
		mm	45			72		98		113	175	235	260
H2 Forged steel version (approx.)		in	2.1	–	2.75	3.6	3.85	–	5.05	–			
		mm	53	–	70	92	98	–	128	–			

Actuator	cm²	120	240	350	700	1400	2800
	in²	18.6	37.2	54.25	108.5	217	434
Diaphragm ∅ D	in	6.6	9.45	11.02	15.35	20.87	30.31
	mm	168	240	280	390	530	770
H (for 700 cm² and larger incl. lifting ring)	in	2.72	2.56	3.35	7.87	11.30	19.53
	mm	69	65	85	200	287	620
H3 (Type 3271 and Type 3277 Actuator) [1]	in	4.33			7.48	24.02	25.51
	mm	110			190	610	648
Thread		M 30 x 1.5				M 60 x 1.5	M 100 x 2
a (for Type 3271 Actuator)		G ⅛ (⅛ NPT)	G ¼ (¼ NPT)	G ⅜ (⅜ NPT)		G ¾ (¾ NPT)	G 1 (1 NPT)
a2 (for Type 3277 Actuator)		–	G ⅜ (⅜ NPT)			–	

[1] Minimum clearance required to disassemble the actuator

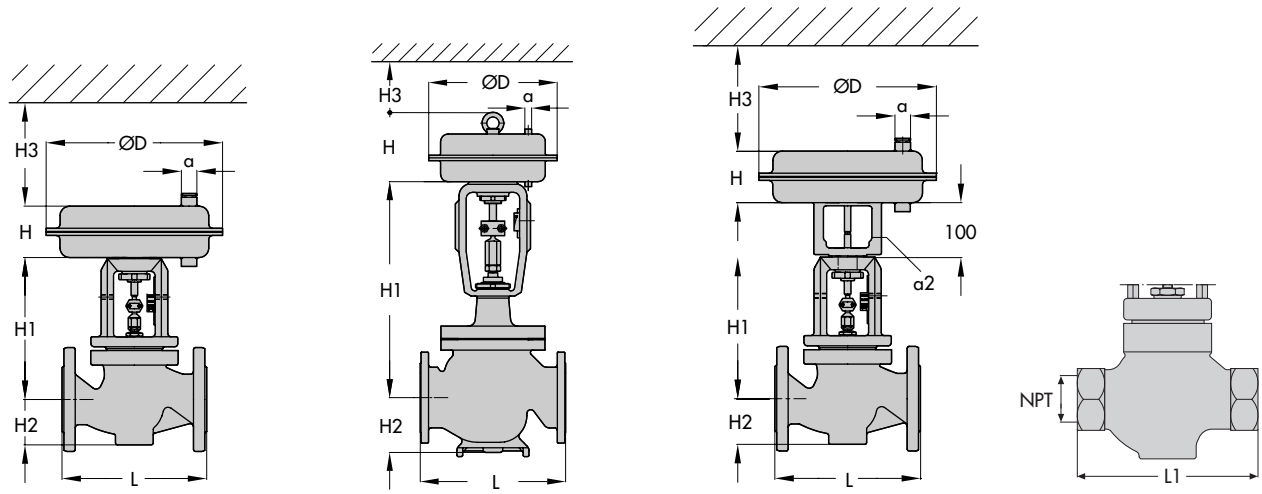

Type 241-1 · ½″ to 6″ | Type 241-1 · 8″ and 10″ | Type 241-7 · ½″ to 6″ | Type 241 · ½ to 2 NPT

Table 8 · Weights for Type 241-1 and Type 241-7 Control Valves

Valve	in	½″	¾″	1″	1½″	2″	2½″	3″	4″	6″	8″	10″
	mm	15	20	25	40	50	65	80	100	150	200	250
Weight without actuator	lbs	11	13	15	26	33	53	66	92	264	728	840
	kg	5	6	7	12	15	24	30	42	120	330	380

Actuator	cm^2	120	240	350	700	1400	2800
	in^2	18.6	37.2	54.25	108.5	217	434
Weight Type 3271	lbs	6.6	11	18	48.5	154	772
	kg	3	5	8	22	70	450
Weight Type 3277	lbs	7.7	20	26.5	57.5	–	
	kg	3.5	9	12	26	–	

Table 9 · Dimensions and weights for special versions with insulating section or metal bellows · (without actuator)

Table 9a · Nominal sizes ½″ to 6″ and NPT thread ½″ to 2″

Valve		in	½″	¾″	1″	1½″	2″	2½″	3″	4″	6″
		mm	15	20	25	40	50	65	80	100	150
Height H4	Short insul. sect./bellows	in	15.95			15.95		17.13		25	25.79
		mm	405			405		435		635	655
	Long insul. sect./bellows	in	27.95			27.56		29.13		34.45	38.78
		mm	710			700		740		875	985
Weight (approx.)		lbs	18	20	22	40	46	71	84	132	330
		kg	8	9	10	18	21	32	38	60	150

Table 9b · Nominal sizes 8″ and 10″

Version with		Insulating section		Metal bellows	
Actuator	cm^2	1400	2800	1400	2800
	in^2	217	434	217	434
H4 in sizes 8″, 10″	in	49.21	52.56	57.21	60.63
	mm	1250	1335	1453	1540
Weight (approx. lbs) in	8″	840	885	860	905
	10″	950	995	970	1015
Weight (approx. kg) in	8″	380	400	390	410
	10″	430	450	440	460

Dimensions and weights for versions with heating jacket on request

Type 241 with insulating section or metal bellows

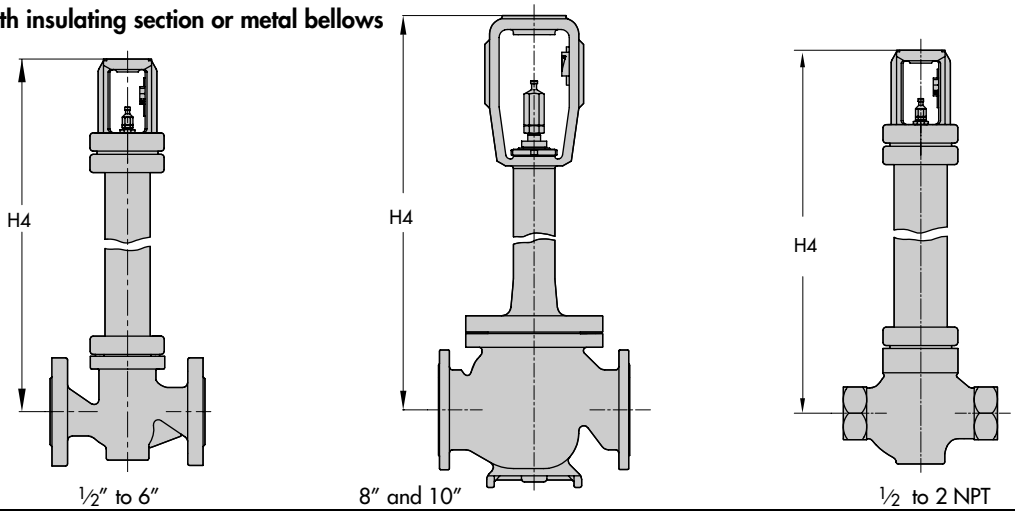

Ordering text:

Nominal size	... ″
Nominal pressure	ANSI Class ...
Body material	According to Table 2
Connection	Flanges (form FF or RF) or NPT thread
Plug	Standard, balanced, with metal sealing, soft sealing or lapped-in metal
Characteristic	Equal percentage or linear
Actuator	Type 3271 or Type 3277 as described in T 8310 EN or T 8311 EN
Fail-safe action	Valve CLOSED or valve OPEN
Process fluid	Density in lb/cu.ft or kg/m^3 and temperature in °F or °C
Flow rate	In lbs/h or kg/h or cu.ft/min or m^3/h at standard or operating conditions
Pressure	p_1 in bar (absolute pressure p_{abs}) p_2 in bar (p_{abs}) at minimum, standard and maximum flow rate
Accessories	Positioner and/or limit switch

Specifications subject to change without notice.

SAMSON AG · MESS- UND REGELTECHNIK
Weismüllerstraße 3 · 60314 Frankfurt am Main · Germany
Phone: +49 69 4009-0 · Fax: +49 69 4009-1507
Internet: http://www.samson.de

Series 250

Pneumatic Control Valves Type 3251-1 and Type 3251-7
Globe Valve Type 3251

ANSI version

Application

Control valve for process engineering applications with high industrial requirements

Nominal sizes	**½" to 8"**
Nominal pressure	**ANSI Class 150 to Class 2500**
Temperatures	**–200 to 500 °C (–325 to 930 °F)**

Type 3251 Globe Valve optionally operated with a:

- Type 3271 Pneumatic Actuator (Type 3251-1 Control Valve)
- Type 3277 Pneumatic Actuator (Type 3251-7 Control Valve) for integrated positioner attachment

Valve body optionally made of:

- Carbon steel
- Stainless carbon steel or
- High-temperature (heat-treated) or cold-resisting carbon steel

Low-noise valve plugs optionally with:

- Metal sealing
- Soft sealing or
- Lapped-in metal sealing
- Balanced for handling large differential pressures

The control valves, designed according to the modular assembly principle, can be equipped with various accessories:

Positioners, limit switches, solenoid valves and other equipment according to IEC 60534-6 and NAMUR recommendation (see Information Sheet T 8350 EN for details).

Versions

Standard version with PTFE packing for temperatures from –10 to 220 °C (15 to 428 °F) or with adjustable high-temperature (HT) packing for temperatures for –10 to 350 °C (15 to 660 °F), nominal sizes ½" to 8", ANSI Class 150 to 900

Type 3251-1 (Fig. 1) · Type 3251 Valve and Type 3271 Actuator with 350 to 2800 cm^2 effective areas (see Data Sheet T 8310 EN)

Type 3251-7 · Type 3251 Valve with Type 3277 Actuator with 350 or 700 cm^2 effective areas (see Data Sheet T 8311 EN)

Further versions with

- **Class 1500 and 2500** · On request
- **Welding ends or welding-neck ends** acc. ANSI B16.25
- **Flow divider** · For noise level reduction, see T 8081 EN
- **AC Trim)** · See Data Sheets T 8082 EN and T 8083 EN
- **Insulating section or bellows seal** · See Technical data
- **Heating jacket** · Details on request
- **Additional handwheel** · See T 8310 EN and T 8311 EN
- **Version according to DIN standards** · DN 15 to 200, nominal pressure PN 16 to 400, see Data Sheet T 8051 EN

Fig. 1 · Type 3251-1 Pneumatic Control Valve with Type 3271 Pneumatic Actuator

- **Type 3251-3 Hand-operated Valve** · With Type 3273 Hand-operated Actuator, for valves with max. 30 mm rated travel, see Data Sheet T 8312 EN
- **Type 3251-2 Electric Control Valve** · Details on request

Associated Information Sheet	**T 8000 EN**	**Edition May 2003**	
Information Sheet for Actuators	**T 8300 EN**	**Data Sheet**	**T 8052 EN**

Principle of operation

The process medium flows through the valve in the direction indicated by the arrow. The valve plug position determines the cross-sectional area of flow.

The version with the metal bellows seal (Fig. 4) is equipped with a test connection to allow the monitoring of the stainless steel bellows.

A pressure-balanced plug (Fig. 3) can be used when high pressures or differential pressures act on the valve plug and the force produced by the actuator is insufficient.

The control valves can be equipped with a St I or St III Flow Divider (Fig. 4, see Data Sheet T 8081 EN for details).

Fail-safe positions

Depending on how the compression springs are arranged in the actuator (see Data Sheets T 8310 EN and T 8311 EN for details), the control valve offers two different fail-safe positions effective upon air supply failure:

"Actuator stem extends" (fail-close):
Upon air supply failure, the force of the compression springs causes the valve to close.

"Actuator stem retracts" (fail-open):
Upon air supply failure, the force of the compression springs causes the valve to open.

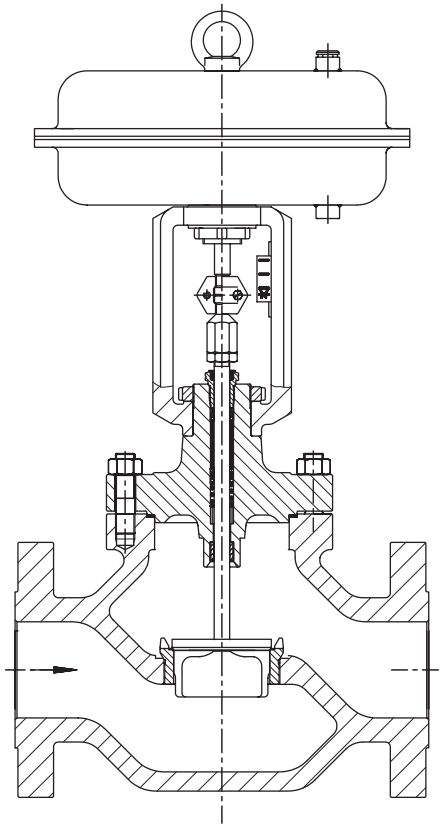

Fig. 2 · Type 3251-1 Control Valve with Type 3271 Pneumatic Actuator

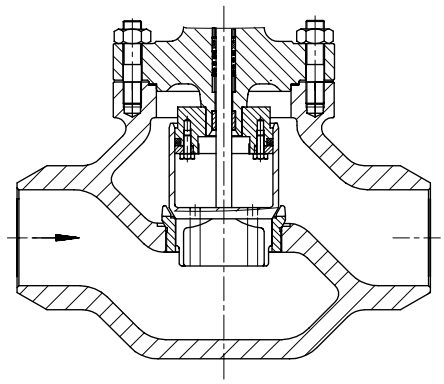

Fig. 3 · Type 3251 Globe Valve with welding ends and balanced valve plug

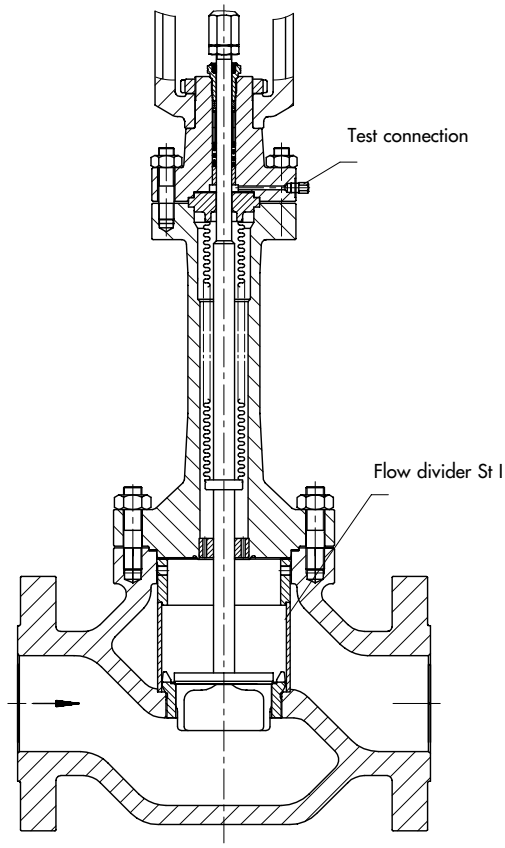

Fig. 4 · Type 3251 Globe Valve with St I Flow Divider and additional metal bellows seal with test connection

Table 1 · Technical Data for Type 3251 Globe Valve

Materials			Carbon steel A 216 WCC	Carbon steel A 217 WC6	Stainless carbon steel A 351 CF8M
Nominal sizes			½″ ... 6″ · 8″ in Class 600		
Nominal pressure [1]		Class	150 ... 900		
End connection		Flanges	All ANSI versions		
		Welding ends	Acc. to ANSI B 16.25		
Plug sealing			Metal sealing, soft sealing or lapped-in metal sealing		
Characteristic			Equal percentage or linear		
Rangeability			50 : 1		
Temperature ranges in °C (°F) · Permissible operating pressures acc. to pressure-temperature diagrams (see Information Sheet T 8000-2 EN)					
Valve body without insulating section			–10 … 220 °C (14 … 428 °F) · Up to 350 °C (660 °F) with high-temperature packing		
Body with		Insulating section	–29...427 °C (–20...800 °F)	–29...500 °C (–20...930 °F)	–200...427 °C (–328...800 °F)
		Bellows seal	–29...427 °C (–20...800 °F)	–29...500 °C (–20...930 °F)	–200...427 °C (–328...800 °F)
Valve plug[2]	Standard	Metal sealing	–200...500 °C (–325...930 °F)		
		Soft sealing	–200...220 °C (–325...428 °F)		
	Balanced	PTFE ring	–200...220 °C (–325...428 °F)		
		Graphite ring	220...500 °C (428...930 °F)		
Leakage class according to DIN EN 1349: 2000 / ANSI/FCI 70-2-1991					
Valve plug	Standard	Metal sealing	IV		
		Soft sealing	VI		
		Lapped-in metal	IV-S2 · 4″ and upwards: IV-S1		
		Balanced, metal sealing	With PTFE ring: IV · With graphite ring: III		

[1] Up to Class 2500 on request.

[2] Only in combination with a suitable body material.

Table 2 · Materials (WN = Material Number according to EN European standard)

Standard version Valve body and flanges [1]		Carbon steel A 216 WCC	Carbon steel A 217 WC6	Stainless carbon steel A 351 CF8M
Seat and plug [2]	Metal sealing	WN 1.4006/1.4008		WN 1.4571/1.4581
Seal ring with	Soft sealing	PTFE with 15 % glass fiber		
	Balanced	PTFE with carbon · Graphite		
Guide bushing		WN 1.4112		WN 2.4610
Stuffing box packing		V-ring packing, PTFE with carbon, spring of WN 1.4310 or high-temperature packing		
Body gaskets		Metal		
Insulating section [3]		A 217 WC6/A 182 F12		A 351 CF8M/A 182 F316
Metal bellows seal				
Intermediate piece [3]		A 217 WC6/A 182 F12		A 351 CF8M/A 182 F316
Metal bellows		WN 1.4571		
Heating jacket		WN 1.4541		

1) See also Pressure-Temperature Diagram (T 8000-2 EN); material for cryogenic service: A 352 LCC.
2) All seats and plugs with metal sealing also with Stellite facing or plug of pure Stellite available.
3) Depending on the valve bonnet material.

Table 3 · C_v and K_{vs} values · Versions in shaded areas also available with balanced plug

Table 3a · Overview with St I (C_v I/K_{vs} I) and St III (Cv III/K_{vs} III) Flow Divider

C_v	0.12	0.2	0.3	0.5	0.75	1.2	2	3	5	7.5	12	20	30	47	75	120	190	290	420	735
K_{vs}	0.1	0.16	0.25	0.4	0.63	1.0	1.6	2.5	4.0	6.3	10	16	25	40	63	100	160	250	360	630
C_v I	–						1.7	2.6	4.2	7	10.5	17	26	42	67	105	170	265	375	650
K_{vs} I							1.45	2.2	3.6	5.7	9	14.5	22	36	57	90	144	225	320	560
C_v III	–								3.5	5.6	9	14	23	35	55	90	140	220	315	–
K_{vs} III									3	4.8	7.5	12	20	30	47	75	120	190	270	–
Seat ∅ mm	6						12		24			31	38	50	63	80	100	125	150	200
Rated travel mm	15													30				60		
Rated travel in	0.5″													1.18″				2.36″		

Table 3b · Versions without flow divider

C_v		0.12	0.2	0.3	0.5	0.75	1.2	2	3	5	7.5	12	20	30	47	75	120	190	290	420	735
DN in/mm																					
½″	15	•	•	•	•	•	•	•	•	•											
1″	25	•	•	•	•	•	•	•	•	•	•	•									
1½″	40	•	•	•	•	•	•	•	•	•	•	•	•	•							
2″	50									•	•	•	•	•	•						
3″	80									•	•	•	•	•	•	•	•				
4″	100													•	•	•	•	•			
6″	150															•	•	•	•	•	
8″	200																	•	•	•	•

Table 3c · Versions with St I Flow Divider

C_v I		–						1.7	2.6	4.2	7	10.5	17	26	42	67	105	170	265	375	650
DN in/mm																					
½″	15							•	•	•											
1″	25							•	•	•	•	•									
1½″	40							•	•	•	•	•	•	•							
2″	50									•	•	•	•	•	•						
3″	80									•	•	•	•	•	•	•	•				
4″	100													•	•	•	•	•			
6″	150															•	•	•	•	•	
8″	200																	•	•	•	•

Table 3d · Versions with St III Flow Divider

C_v III		–								3.5	5.6	9	14	23	35	55	90	140	220	315	–
DN in/mm																					
2″*	50									•	•	•									
3″	80									•	•	•	•	•	•						
4″	100													•	•	•					
6″	150															•	•	•	•		
8″	200																		•	•	

* 2″ version (DN 50) and St III not available with metal bellows

Notes on differential pressure tables

The differential pressure tables were prepared under the following conditions:

- Process flow directed against the closing direction of the valve plug
- Valve plug version with metal sealing
- Version with PTFE packing
- Tables 4a and 4b apply to unbalanced valve plug with a downstream pressure p_2 = 0 bar (psi)
- For the maximum differential pressures listed and the previously mentioned conditions, the leakage rate stated in Table 1 is not exceeded
- All pressures mentioned are in bar and psi
- The differential pressure stated can be limited by the pressure-temperature diagram (see T 8000-2 EN).

Note on fail-safe position "Valve CLOSED": Always use pretensioned spring ranges for actuators with reduced travels.

Overview: Valve versions of the Δp tables

Table 4a and 4b: Valve with **unbalanced** plug without metal bellows seal; fail-safe position "Valve CLOSED"

Table 5a and 5b:Valve with **balanced** plug with PTFE ring, without metal bellows seal; fail-safe position "Valve CLOSED" or "Valve OPEN"

Table 6a and 6b: Valve with **unbalanced** plug without metal bellows seal; "Valve OPEN"

Note: Permissible differential pressures for special versions with soft sealing or lapped-in metal plugs, with metal bellows seal or balanced plug with graphite ring are available on request.

Table 4a · Permissible differential pressures Δp for valves with unbalanced plug with metal sealing and without metal bellows seal; fail-safe position "Valve CLOSED" · Pressures in bar

The bench ranges in the shaded areas indicate normal operation, i.e. operation at rated travel · Values in non-shaded areas apply to springs pre-tensioned to maximum · Values in parentheses apply to half travel

Fail-safe position "Valve CLOSED" (fail-close)												
Nominal bench range (bar) with actuator (cm^2)		350	0.2...1.0	0.4...1.2	0.4...2.0	0.8...2.4	0.6...3.0	1.2...3.6	1.4...2.3	2.1...3.3	–	–
		700		0.4...1.2 (0.8...1.2)		0.8...2.4 (1.6...2.4)		1.2...3.6 (2.4...3.6)	1.4...2.3 (1.85...2.3)	2.1...3.3 (2.7...3.3)	2.35...3.8 (3.05...3.8)	2.6...4.3 (3.45...4.3)
		1400					0.5...2.5	1.0...3.0 (2.0...3.0)	1.1...2.4	1.4...2.7 (2.05...2.7)	1.3...2.8	1.7...3.2 (2.45...3.2)
		2800	0.4...1.2 (0.8...1.2)	0.8...2.4 (1.6...2.4)	1.0...3.0 (2.0...3.0)	1.2...3.6 (2.4...3.6)	0.9...1.6	1.1...1.8 (1.25...1.6)	1.0...2.1	1.25...2.35 (1.55...2.1)	1.1...2.6	1.5...3.0 (1.85...2.6)
		2x2800										
Required supply pressure			Upper spring range value + 0.2 bar									
Nominal size	C_v	Actuator cm^2	Δp at p_2 = 0 bar									
½″ to 1½″	0.12 to 1.2	350	46.1	102	102	213	158	325	380	400	–	–
	2 to 3	350	46.1	102	102	213	158	325	380	400	–	–
	5 to 12	350	8.7	22.4	22.4	50.5	36.6	78.4	92.3	141	–	–
		700	–	(106)	–	(217)	–	(329)	(252)	(370)	(400)	–
2″		350	8.1	22	22	49.9	35.9	77.7	91.7	140	–	–
		700	–	(105)	–	(217)	–	(328)	(252)	(370)	(400)	–
1½″ to 3″	20	350	4.3	12.7	12.7	29.4	21	45.1	54.4	83.6	–	–
		700	–	(62.7)	–	(129)	–	(196)	(150)	(221)	(250)	(284)
1½″ to 4″	30	350	–	8.1	8.1	19.2	13.6	30.3	35.8	55.3	–	–
		700	–	(41.4)	–	(85.8)	–	(130)	(99.7)	(147)	(166)	(188)
2″ to 4″	47	700	4.3	10.7	10.7	23.6	17.1	36.4	42.8	65.3	73.3	81.3
		1400	–	(49.2)	–	(100)	–	(126)	–	(129)	–	(155)
3″ to 6″	75	700	–	6.3	6.3	14.4	10.4	22.5	26.5	40.7	45.7	50.8
		1400	–	(30.6)	–	(62.9)	–	(79.1)	–	(81.1)	–	(97.3)
3″ to 6″	120	700	–	–	–	8.7	6.2	13.7	16.3	25	28.2	31.3
		1400	–	(18.8)	–	(38.8)	–	(48.8)	–	(50.1)	–	(60.1)
4″ to 6″	190	700	–	–	–	5.4	–	8.7	10.3	15.9	17.9	19.9
		1400	–	(11.9)	–	(24.7)	–	(31.1)	–	(31.9)	–	(38.3)
8″	190	700	–	–	–	5.4	–	8.6	10.2	15.8	17.8	19.8
		1400	–	(11.8)	–	(24.6)	–	(31)	–	(31.8)	–	(38.2)
6″	290	1400	–	–	–	7.5	4.4	9.5	10.5	13.6	12.6	16.7
		2800	(15.7)	(32.1)	(40.3)	(48.5)	–	(24.9)	–	(31.1)	–	(37.2)
8″	290	1400	–	–	–	7.4	4.3	9.5	10.5	13.6	12.5	16.6
		2800	(15.6)	(32)	(40.3)	(48.5)	–	(24.9)	–	(31)	–	(37.2)
		2x2800	(31.2)	(64)	(80.6)	(97)	–	(49.8)	–	(62)	–	(74.4)
6″	420	1400	–	–	–	5.1	–	6.5	7.2	9.4	8.7	11.5
		2800	(10.8)	(22.2)	(27.9)	(33.6)	–	(17.2)	–	(21.5)	–	(25.8)
8″	420	1400	–	–	–	5.1	–	6.5	7.2	9.3	8.6	11.5
		2800	(10.7)	(22.2)	(27.9)	(33.6)	–	(17.2)	–	(21.5)	–	(25.7)
		2x2800	(21.4)	(44.4)	(55.8)	(67.2)	–	(34.4)	–	43	–	(51.4)
8″	735	1400	–	–	–	–	–	–	4	5.2	4.7	6.4
		2800	(6)	(12.4)	(15.6)	(18.8)	–	(9.6)	–	(12)	–	(14.4)
		2x2800	(12)	(24.8)	(31.2)	(37.6)	–	(19.2)	–	(24)	–	(28.8)

Table 4b · Permissible differential pressures Δp for valves with unbalanced plug with metal sealing and without metal bellows seal; fail-safe position "Valve CLOSED" · Pressures in psi

The bench ranges in the shaded areas indicate normal operation, i.e. operation at rated travel · Values in non-shaded areas apply to springs pre-tensioned to maximum · Values in parentheses apply to half travel

Fail-safe position "Valve CLOSED" (fail-close)												
Nominal bench range (psi) with actuator (cm^2)		350	3...15	6...18	6...30	12...36	9...45	18...52	20...34	30...48	–	–
		700		6...18 (12...18)		12...36 (23...36)		18...52 (35...52)	20...34 (27...34)	30...48 (39...48)	35...55 (44...55)	36...62 (50...62)
		1400					7...36	15...45 (30...45)	16...36	20...39 (30...39)	19...41	25...46 (36...46)
		2800	6...18 (12...18)	12...36 (23...36)	15...45 (30...45)	18...52 (35...52)	13...23	16...26 (18...23)	15...30	18...34 (22...30)	17...36	22...45 (27...36)
		2x2800										
Required supply pressure			Upper spring range value + 3 psi									
Nominal size	C_v	Actuator cm^2	Δp at p_2 = 0 psi									
½″ to 1½″	0.12 to 1.2	350	668	1479	1479	3088	2291	4712	5510	5800	–	–
	2 to 3	350	668	1479	1479	3088	2291	4712	5510	5800	–	–
	5 to 12	350	126	325	325	732	530	1137	1338	2044	–	–
		700	–	(1537)	–	(3146)	–	(4770)	(3654)	(5365)	(5800)	–
2″		350	117	319	319	723	520	1126	1329	2030	–	–
		700	–	(1522)	–	(3146)	–	(4756)	(3654)	(5365)	(5800)	–
1½″ to 3″	20	350	62	184	184	426	304	654	789	1212	–	–
		700	–	(909)	–	(1870)	–	(2842)	(2175)	(3204)	(3625)	(4118)
1½″ to 4″	30	350	–	117	117	278	197	439	519	801	–	–
		700	–	(600)	–	(1244)	–	(1885)	(1445)	(2131)	(2407)	(2726)
2″ to 4″	47	700	62	155	155	342	248	527	620	947	1063	1178
		1400	–	(713)	–	(145)	–	(1827)	–	(1870)	–	(2247)
3″ to 6″	75	700	–	91	91	209	151	326	384	590	662	736
		1400	–	(443)	–	(912)	–	(1147)	–	(1176)	–	(1411)
3″ to 6″	120	700	–	–	–	126	90	198	236	362	409	454
		1400	–	(272)	–	(562)	–	(707)	–	(726)	–	(871)
4″ to 6″	190	700	–	–	–	78	–	126	149	230	259	288
		1400	–	(172)	–	(358)	–	(451)	–	(462)	–	(555)
8″	190	700	–	–	–	78	–	124	148	224	258	287
		1400	–	(171)	–	(356)	–	(449)	–	(461)	–	(554)
6″	290	1400	–	–	–	108	64	137	152	197	183	242
		2800	(227)	(465)	(584)	(703)	–	(361)	–	(451)	–	(539)
8″	290	1400	–	–	–	107	62	137	152	197	181	240
		2800	(226)	(464)	(584)	(703)	–	(361)	–	(449)	–	(539)
		2x2800	(452)	(928)	(1168)	(1406)	–	(722)	–	(899)	–	(1079)
6″	420	1400	–	–	–	74	–	94	104	136	126	166
		2800	(156)	(322)	(404)	(487)	–	(249)	–	(312)	–	(374)
8″	420	1400	–	–	–	74	–	94	104	135	125	166
		2800	(155)	(322)	(404)	(487)	–	(249)	–	(312)	–	(372)
		2x2800	(310)	(644)	(809)	(974)	–	(499)	–	(623)	–	(745)
8″	735	1400	–	–	–	–	–	–	58	75	68	93
		2800	(87)	(180)	(226)	(272)	–	(139)	–	(174)	–	(209)
		2x2800	(174)	(359)	(452)	(545)	–	(278)	–	(348)	–	(417)

Table 5a · Permissible differential pressures Δp for valves with balanced plug with metal sealing and PTFE ring, without metal bellows seal · Pressures in bar

The bench ranges in the shaded areas indicate normal operation, i.e. operation at rated travel · Values in non-shaded areas apply to springs pre-tensioned to maximum · Values in parentheses apply to half travel

Fail-safe position			**"Valve CLOSED" (fail-close)**						**"Valve OPEN" (fail-open)**		
Nominal bench range (bar) with actuator (cm^2)		700	0.4...2.0	0.8...2.4 (1.6...2.4)	–	–	0.6...3.0	1.2...3.6	0.4 ... 2.0 (0.4 ... 1.2)		
		1400			0.5...2.5	1.0...3.0 (2.0...3.0)	–	–			
		2800					0.6...3.0	1.2...3.6 (2.4...3.6)			
		2x2800									
Required supply pressure			Upper spring range value + 0.2 bar						2.4	4.0	6.0
Nominal size	C_v	Actuator cm^2	Δp at p_2 = 0 bar								
3″ 4″	75	700	57.4	155	–	–	106	252	57.4	400	–
		1400	–	(400)	–	(400)	–	–	(400)	–	–
6″	75	700	22.2	62.1	–	–	42.2	102	22.2	182	382
		1400	–	(302)	–	(381)	–	–	(221)	(400)	–
3″ 4″	120	700	48.1	146	–	–	96.8	243	48.1	400	–
		1400	–	(400)	–	(400)	–	–	(400)	–	–
6″	120	700	18.4	58.3	–	–	38.4	98.3	18.4	178	378
		1400	–	(298)	–	(378)	–	–	(218)	(400)	–
4″	190	700	37.2	135	–	–	85.9	232	37.2	400	–
		1400	–	(400)	–	(400)	–	–	(400)	–	–
6″	190	700	13.9	53.8	–	–	33.9	93.8	13.9	174	373
		1400	–	(293)	–	(373)	–	–	(213)	(400)	–
8″	190	700	4.6	20.2	–	–	12.4	35.8	4.6	67	145
		1400	–	(114)	–	(145)	–	–	(82.6)	(207)	(363)
6″	290	1400	48.3	128	68.2	168	–	–	48.3	368	400
		2800	–	(400)	–	(400)	–	(400)	(400)	–	–
8″	290	1400	18	49.2	25.8	64.8	–	–	18	143	299
		2800	–	(236)	–	(298)	–	(361)	(174)	(400)	–
		2x2800	–	(400)	–	(400)	–	(400)	(348)	(400)	–
6″	420	1400	42.6	123	62.6	162	–	–	42.7	362	400
		2800	–	(400)	–	(400)	–	(400)	(400)	–	–
8″	420	1400	15.8	47	23.6	62.6	–	–	15.3	109	265
		2800	–	(234)	–	(296)	–	(359)	(172)	(400)	–
		2x2800	–	(400)	–	(400)	–	(400)	(344)	(400)	–
8″	735	1400	11.4	42.6	19.2	58.2	–	–	11.4	136	292
		2800	–	(230)	–	(292)	–	(354)	(167)	(400)	–
		2x2800	–	(400)	–	(400)	–	(400)	(334)	(400)	–

Table 5b · Permissible differential pressures Δp for valves with balanced plug with metal sealing and PTFE ring, without metal bellows seal · Pressures in psi

The bench ranges in the shaded areas indicate normal operation, i.e. operation at rated travel · Values in non-shaded areas apply to springs pre-tensioned to maximum · Values in parentheses apply to half travel

Fail-safe position			**"Valve CLOSED" (fail-close)**						**"Valve OPEN" (fail-open)**		
Nominal bench range (psi) with actuator (cm^2)		700	6...30	12...36 (23...36)	–	–	9...45	18...52	6 ... 30 (6 ... 18)		
		1400			7...36	15...44 (30...45)	–	–			
		2800					9...45	18...52 (36...52)			
		2x2800									
Required supply pressure			Upper spring range value + 3 psi						36	60	90
Nominal size	C_v	Actuator cm^2	Δp at p_2 = 0 psi								
3″ 4″	75	700	832	2247	–	–	1537	3654	832	5800	–
		1400	–	(5800)	–	(5800)	–	–	(5800)	–	–
6″	75	700	322	900	–	–	615	1479	322	2639	5539
		1400	–	(4379)	–	(5524)	–	–	(3204)	(5800)	–
3″ 4″	120	700	697	2117	–	–	1403	2523	697	5800	–
		1400	–	(5800)	–	(5800)	–	–	(5800)	–	–
6″	120	700	267	845	–	–	557	1425	267	2581	5481
		1400	–	(4321)	–	(5481)	–	–	(3161)	(5800)	–
4″	190	700	539	1957	–	–	1245	3364	539	5800	–
		1400	–	(5800)	–	(5800)	–	–	(5800)	–	–
6″	190	700	201	780	–	–	491	1360	201	2523	5408
		1400	–	(4248)	–	(5408)	–	–	(3088)	(5800)	–
8″	190	700	66	293	–	–	179	519	66	971	2102
		1400	–	(1653)	–	(2102)	–	–	(1197)	(3001)	(5263)
6″	290	1400	700	1856	989	2436	–	–	700	5336	5800
		2800	–	(5800)	–	(5800)	–	(5800)	(5800)	–	–
8″	290	1400	261	713	374	939	–	–	261	2073	4335
		2800	–	(3422)	–	(4321)	–	(5234)	(2523)	(5800)	–
		2x2800	–	(5800)	–	(5800)	–	(5800)	(5046)	(5800)	–
6″	420	1400	617	1783	907	2349	–	–	619	5249	5800
		2800	–	(5800)	–	(5800)	–	(5800)	(5800)	–	–
8″	420	1400	229	681	342	907	–	–	221	1580	3842
		2800	–	(3393)	–	(4292)	–	(5205)	(2494)	(5800)	–
		2x2800	–	(5800)	–	(5800)	–	(5800)	(4988)	(5800)	–
8″	735	1400	165	617	278	844	–	–	165	1972	4234
		2800	–	(3335)	–	(4234)	–	(5133)	(2421)	(5800)	–
		2x2800	–	(5800)	–	(5800)	–	(5800)	(4843)	(5800)	–

Table 6 · Permissible differential pressures Δp for valves with unbalanced plug with metal sealing and without metal bellows seal · Fail-safe position "Valve OPEN"

			Table 6a · Pressures in bar				Table 6b · Pressures in psi			
Nominal bench range in bar/psi with actuator (cm^2)		350	0.2 ... 1.0 (0.2 ... 0.6)				3 ... 15 (3 ... 9)			
		700								
		1400								
		2800								
		2x2800								
Required supply pressure			1.4	2.4	4.0	6.0	20	36	60	90
Nominal size	C_v	Actuator cm^2	Δp at p_2 = 0 bar				Δp at p_2 = 0 psi			
½″ to 1½″	0.12 to 1.2	350	102	380	400	–	1479	5510	5800	–
	2 to 3	350	101	380	400	–	1464	5510	5800	–
	5 to 12	350	22.4	92.1	203	343	325	1335	2943	4973
		700	(106)	(245)	(400)	–	(1537)	(3552)	(5800)	–
2″		350	21.6	91.3	203	342	313	1324	2943	4959
		700	(105)	(244)	(400)	–	(1522)	(3538)	(5800)	–
1½″ to 3″	20	350	12.4	54.2	121	204	180	786	1754	2958
		700	(62.5)	(146)	(280)	(400)	(906)	(2117)	(4060)	–
1½″ to 4″	30	350	7.9	35.7	80.1	136	114	517	1161	1972
		700	(41)	(97)	(185)	(297)	(594)	(2682)	(2682)	–
2″ to 4″	47	700	10.6	42.7	94.1	158	153	619	1364	2291
		1400	(49)	(113)	(216)	(344)	(710)	(1638)	(3132)	–
3″ to 6″	75	700	6.2	26.4	58.7	99.2	90	383	851	1438
		1400	(30.4)	(71)	(135)	(216)	(441)	(1029)	(1957)	–
3″ to 6″	120	700	–	16.2	36.2	61.3	–	235	525	889
		1400	(18.7)	(43.7)	(84)	(134)	(271)	(633)	(1218)	(1943)
4″ 6″	190	700	–	10.2	23	39.1	–	148	333	567
		1400	(11.8)	(27.8)	(53.5)	(85)	(171)	(403)	(775)	(1232)
8″	190	700	–	10.0	22.9	38.9	–	145	332	564
		1400	(11.6)	(27.7)	(53.3)	(85)	(168)	(401)	(773)	(1232)
6″	290	1400	–	13.6	30	50.6	–	197	435	733
		2800	(15.6)	(36.2)	(69)	(110)	(226)	(525)	(1000)	–
8″	290	1400	–	13.5	29.9	50.4	–	195	433	731
		2800	(15.5)	(36.1)	(69)	(110)	(224)	(523)	(1000)	–
		2x2800	(31)	(72)	(138)	(220)	(449)	(1044)	(2001)	–
6″	420	1400	–	9.4	20.8	35	–	136	301	507
		2800	(10.8)	(25)	(47.8)	(76.4)	(156)	(362)	(693)	–
8″	420	1400	–	9.3	20.7	34.9	–	135	300	506
		2800	(10.7)	(25)	(47.8)	(76.3)	(156)	(362)	(693)	
		2x2800	(21.4)	(50)	(95.6)	(152)	(310)	(725)	(1386)	–
8″	735	1400	–	5.1	11.5	19.5	–	74	166	282
		2800	(5.9)	(13.9)	(26.8)	(42.8)	(85)	(201)	(388)	(620)
		2x2800	(11.8)	(27.8)	(53.6)	(85.6)	(171)	(403)	(777)	–

Table 7 · Dimensions for Type 3251-1 and Type 3251-7 Pneumatic Control Valve as standard version

Valve				½″	1″	1½″	2″	3″	4″	6″	8″
Length L		Class 150	mm	184	184	222	254	298	352	451	543
			in	7.24	7.24	8.74	10	11.73	13.83	17.75	21.37
		Class 300	mm	191	197	235	267	318	368	473	568
			in	7.52	7.75	9.25	10.52	12.52	14.49	18.62	22.36
		Class 600	mm	203	210	251	286	337	394	508	609
			in	7.99	8.26	9.88	11.26	13.26	15.51	20	23.97
		Class 900	mm	216	254	305	368	381	457	609	737
			in	8.5	10	12	14.49	15	17.99	23.97	29.01
H1 for actuator	350 cm²	Class 150/600	mm	392	392	404	457	462	482	–	
			in	15.43	15.43	15.9	17.99	18.19	18.97		
		Class 900	mm	426	426	435	491	462	482		
			in	16.77	16.77	17.12	19.33	18.19	18.97		
	700 cm²	Class 150/600	mm	392	392	404	457	462	482	732	805
			in	15.43	15.43	15.9	17.99	18.19	18.97	29.01	31.69
		Class 900	mm	426	426	435	491	462	482	732	805
			in	16.77	16.77	17.12	19.33	18.19	18.97	29.01	31.69
	1400 cm²	Class 150/600	mm	–			512	517	537	732	805
			in				20.16	20.35	21.14	29.01	31.69
		Class 900	mm				546	517	537	732	805
			in				21.49	20.35	21.14	29.01	31.69
	2800 cm²	Class 150/600	mm	–					722	817	890
			in						28.42	32.16	35.04
		Class 900	mm						722	817	890
			in						28.42	32.16	35.04
H2		Class 150	mm	50	60	80	90	100	160	220	250
			in	1.97	2.36	3.15	3.54	3.93	6.29	8.66	9.84
		Class 300/600	mm	60	70	90	100	120	180	235	270
			in	2.34	2.75	3.54	3.93	4.72	7.02	9.25	10.63
		Class 900	mm	70	80	100	110	120	180	235	270
			in	2.75	3.15	3.93	4.33	4.72	7.08	9.25	10.63

Actuator	cm²	350	700	1400	2800	2 x 2800
Diaphragm ∅	mm	280	390	530	770	
	in	11.02	15.35	20.86	30.3	
H [1]	mm	82	196	287	620	1130
	in	3.23	7.71	11.3	24.41	44.49
H3 [2]	mm	110	190	610	650	
	in	4.33	7.48	24	25.5	
Thread		M 30 x 1.5		M 60 x 1.5	M 100 x 2	
a (with Type 3271 Actuator)		G ⅜ (NPT ⅜)		G ¾ (NPT ¾)	G 1 (NPT 1)	
a2 (with Type 3277 Actuator)		G ⅜ (NPT ⅜)		–		

[1] Actuator 350 cm² without lifting ring

[2] Minimum clearance for actuator disassembly

Table 8 · Weights for Type 3251 Globe Valve in standard version

Valve			½″	1″	1½″	2″	3″	4″	6″	8″
Valve without actuator (approx.)	Cl 150/300	kg	15.5	17.5	21.5	38	59	78	201	427
		lbs	34.2	38.6	47.4	83.8	130	172	443	1191
	Class 600	kg	22	28	36	64	102	137	340	540
		lbs	49	62	80	141	225	302	750	1191
	Class 900	kg	35	41	60	97	120	160	380	650
		lbs	77	90	132	214	265	353	838	1433

Actuator		cm^2	350	700	1400	2800	2 x 2800
Type 3271 (approx.)	Without	kg	8	22	70	450	950
		lbs	17.6	48.5	154.5	992	2095
	With handwheel	kg	13	27	Only with side-mounted handwheel, see T 8310 EN		
		lbs	28.7	59.5			
Type 3277 (approx.)	Without	kg	12	26	–		
		lbs	26.5	57.6			
	With handwheel	kg	17	31			
		lbs	37.5	68.5			

1) Top row without handwheel, bottom row with handwheel

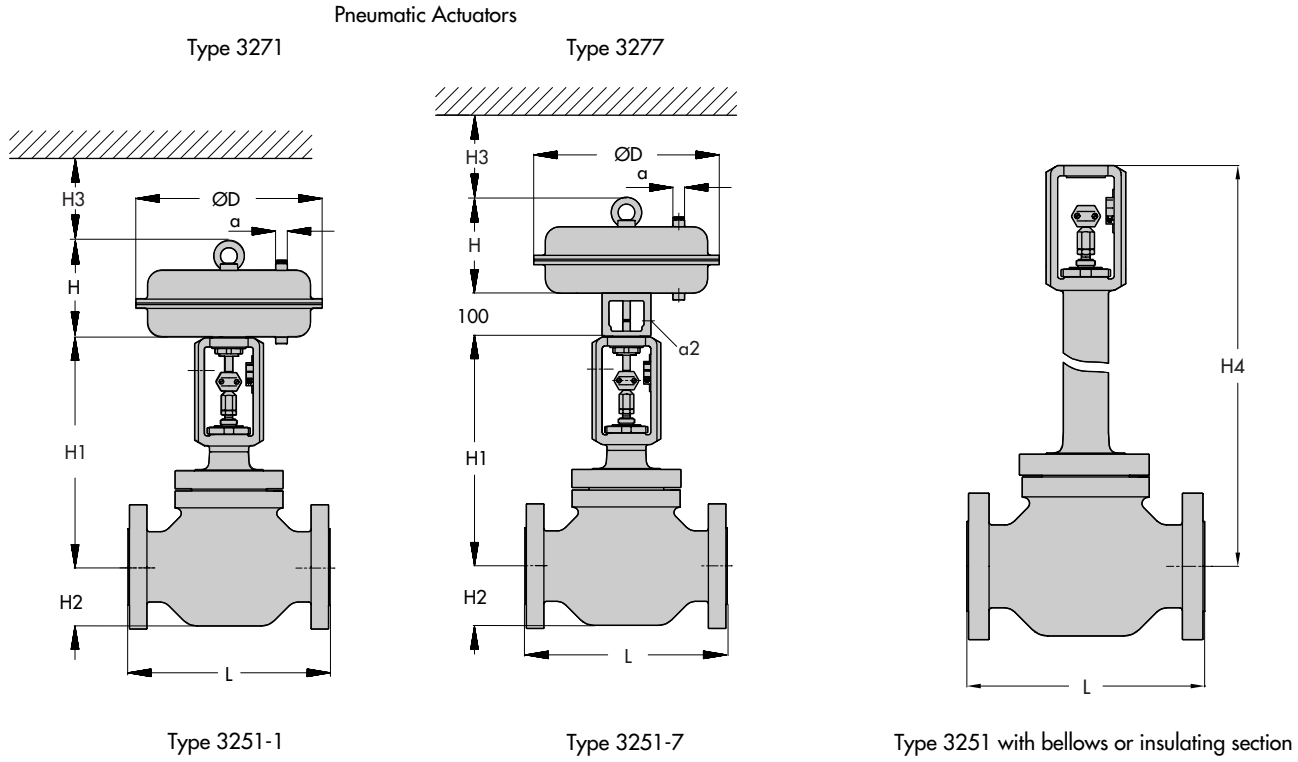

Table 9 · Dimensions and weights for Type 3251 Globe Valve in standard version with insulating section · Without actuator

Nominal size		in	½″	1″	1½″	2″	3″	4″	6″	8″
		mm	**15**	**25**	**40**	**50**	**80**	**100**	**150**	**200**
Class 150 ... 600 H4 for actuator	350 cm²	mm	593	593	605	727	732	752	–	
		in	23.34	23.34	23.82	28.62	28.82	29.6		
	700 cm²	mm	593	593	605	727	732	752	1083	1365
		in	23.34	23.34	23.82	28.62	28.82	29.6	42.64	53.74
	1400 cm²	mm	–			782	787	807	1083	1365
		in				30.78	30.98	31.77	42.62	53.74
	2800 cm²	mm	–					992	1168	1450
		in						39.05	45.98	57.08
Class 900 H4 for actuator	350 cm²	mm	622	622	631	756	732	752	–	
		in	24.48	24.48	24.84	29.76	28.82	29.6		
	700 cm²	mm	622	622	631	756	732	752	1083	1365
		in	24.48	24.48	24.84	29.76	28.82	29.6	42.64	53.74
	1400 cm²	mm	–			811	787	807	1083	1365
		in				31.93	30.98	31.77	42.64	53.76
	2800 cm²	mm	–					992	1168	1450
		in						39.05	45.98	57.08
Weight (kg) without actuator for	Cl 150...600	kg	30	36	44	72	110	156	360	640
		lbs	66.5	79.5	97	159	242.5	344	794	1411
	Class 900	kg	43	49	68	105	130	180	400	730
		lbs	95	108	150	231.5	287	397	882	1610

Table 10 · Dimensions and weights for Type 3251 Globe Valve in standard version with metal bellows · Without actuator

Nominal size		in	½″	1″	1½″	2″	3″	4″	6″	8″
		mm	**15**	**25**	**40**	**50**	**80**	**100**	**150**	**200**
Cl 150 H4 for actuator	350 cm²	mm	590	590	602	836	841	841	–	
		in	23.23	23.23	23.7	32.9	33.1	33.1		
	700 cm²	mm	590	590	602	836	841	841	1139	1455
		in	23.23	23.23	23.7	32.9	33.1	33.1	44.85	57.3
	1400 cm²	mm	–			891	896	896	1139	1455
		in				35.1	35.3	35.3	44.85	57.3
	2800 cm²	mm	–					1081	1224	1540
		in						42.56	48.2	60.63
Cl 300/600 H4 for actuator	350 cm²	mm	590	590	602	836	841	841	–	
		in	23.23	23.23	23.7	32.9	33.1	33.1		
	700 cm²	mm	590	590	602	836	841	841	1271	1855
		in	23.23	23.23	23.7	32.9	33.1	33.1	50.04	73.03
	1400 cm²	mm	–			891	896	896	1271	1855
		in				35.1	35.3	35.3	50.04	73.03
	2800 cm²	mm	–					1081	1356	1940
		in						42.56	53.4	76.4
Cl 900 H4 for actuator	350 cm²	mm	583	583	593	825	841	841	–	
		in	22.95	22.95	23.35	32.5	33.1	33.1		
	700 cm²	mm	583	583	593	825	841	841	1271	1990
		in	22.95	22.95	23.35	32.5	33.1	33.1	50.04	78.35
	1400 cm²	mm	–			880	896	896	1271	1990
		in				34.64	35.27	35.27	50.04	78.35
	2800 cm²	mm	–					1081	1356	2075
		in						42.56	53.4	81.7
Weight without actuator for	Class 150/300	kg	–						360	–
		lbs							794	
	Class 600	kg	30	36	44	72	110	156	360	640
		lbs	66.5	95	97	159	243	344	794	1411
	Class 900	kg	43	49	68	105	130	180	400	730
		lbs	95	108	150	232	287	297	882	1610

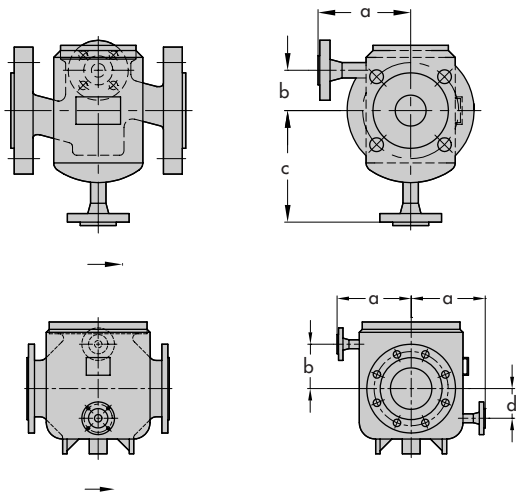

Type 3251 with heating jacket · Dimensions on request

Selection and sizing of the control valve

1. Calculate the C_v (K_v) value according to IEC 60534.
2. Select the nominal size and C_v (K_{vs}) value from Tables 3 to 5.
3. Determine the permissible differential pressure Δp from Tables 4 and 5.
4. Select the valve body material from Tables 1 and 2 as well as the pressure-temperature diagrams in the Information Sheet T 8000-2 EN.
5. Select additional equipment from Tables 1 and 2.

The following details are required on ordering

Nominal size	....
Nominal pressure	ANSI Class ....
Body material	According to Table 2
End connection	Flanges/welding ends
Plug	Standard/balanced Soft sealing, metal sealing or lapped-in metal
Characteristic	Equal percentage or linear
Actuator	Type 3271 or Type 3277 (see T 8310 EN or T 8311 EN)
Fail-safe position	Valve CLOSED or valve OPEN
Process medium	Density in lb/cu.ft or kg/m^3 and temperature in °C (°F)
Flow rate	lbs/h or kg/h or cu.ft/min or m^3/h in standard or operating condition
Pressure	p_1 and p_2 in bar (psi) (absolute pressure p_{abs}), both with minimum, standard and maximum flow
Accessories	Positioner and/or limit switches

Specifications subject to change without notice.

SAMSON AG · MESS- UND REGELTECHNIK
Weismüllerstraße 3 · 60314 Frankfurt · Germany
Phone +49 69 4009-0 · Fax +49 69 4009-1507
Internet: http://www.samson.de

Pneumatic Actuators up to 700 cm²

Type 3271 and Type 3277 for integral positioner attachment

Application

Linear actuator for attachment to final control elements, particularly suitable for Series 240, 250, 280 Control Valves and Type 3510 Micro-flow Valves

Diaphragm area **60 to 700 cm²**

Rated travel **7.5 to 30 mm**

The Type 3271 and Type 3277 Pneumatic Actuators are diaphragm actuators equipped with a rolling diaphragm and internal springs.

Special features

- Low overall height
- Powerful thrust at high response speed
- Low friction
- Various bench ranges by varying the number of springs and their compression
- No special tools required to change the bench range and to reverse the actuator action (also in version with handwheel)
- Designed for supply pressures up to 6 bar
- Continuous operation at temperatures from –35 to +90 °C
- Direct attachment of accessories on additional yoke for Type 3277 Actuator with concealed travel pick-off (Fig. 2)

Versions

– **Type 3271** · **Diaphragm areas 80, 240, 350, 700 cm²** (Fig. 1), optional stainless steel version (1.4301)

– **Type 3277** · **Diaphragm area 240, 350, or 700 cm²** for direct attachment of accessories (Fig. 2), optional stainless steel version (1.4301)

– **Type 3271-52** · **Diaphragm area 60 cm²**, die-cast aluminum body, particularly for Type 3510 Micro-flow Valve (Fig. 3 and Data Sheet T 8091 EN)

– **Type 3271-5** · **Diaphragm area 120 cm²**, die-cast aluminum body (Fig. 4)

– **Type 3277-5** · **Diaphragm area 120 cm²**, die-cast aluminum body for direct attachment of accessories (Fig. 8)

– **Type 3271 or 3277** · **Additional handwheel** for pneumatic actuators with diaphragm areas of 240, 350, or 700 cm² (Fig. 5 and Data Sheet T 8312 EN)

– **Type 3271** · **Mechanical travel stop** (sectional drawing 10), minimum or maximum travel mechanically adjustable in version with 240, 350, or 700 cm²

– **Type 3271/7** · **Fire-Lock version** (Fig. 11) fail-safe action in case of fire, diaphragm areas of 240, 350, 700 cm²

Further versions

– For other process media (e.g. water or oxygen) · Details available on request

– For high temperatures up to 120 °C · On request

Fig. 1 · Type 3271

Fig. 2 · Type 3277

Fig. 3 · Type 3271-52

Fig. 4 · Type 3271-5

Fig. 5 · Type 3271
with additional handwheel

– For low temperatures down to – 40 °C · On request

Associated Mounting and Operating Instructions

Type 3271 Pneumatic Actuator	**EB 8310 EN**
Type 3277 Pneumatic Actuator	**EB 8311 EN**

Edition June 2004

Data Sheet **T 8310-1 EN**

Principle of operation

The signal pressure p_{st} generates a force $F = p_{st} \cdot A$ on the diaphragm area A (2). This force is balanced by the actuator springs (4). Taking into account the rated travel, the number of springs and their compression determine the bench range. The travel H is proportional to the signal pressure p_{st}. The operating direction of the actuator stem (7) depends on the arrangement of the springs and the signal pressure connection (1).

The stem connector (8) connects the actuator stem (7) with the plug stem (10) of the valve.

The adjustable **mechanical travel stop** (Fig. 10) is suitable for actuators made of sheet steel with effective diaphragm areas of 240, 350, or 700 cm^2. Using the limit stop, the actuator travel can be limited by up to 50 % in both directions (actuator stem "extends" or "retracts") and permanently adjusted. A special version with one-sided travel stop for actuators with an effective diaphragm area of 120 cm^2 is available.

Actuators are available with the following fail-safe actions:

"Actuator stem extends (FA)"

The springs cause the actuator stem to move to the lower end position (sectional drawings, right) when the diaphragm is relieved of pressure or when the supply air fails.

"Actuator stem retracts (FE)"

The springs cause the actuator stem to retract (sectional drawings, left) when the diaphragm is relieved of pressure or when the supply air fails.

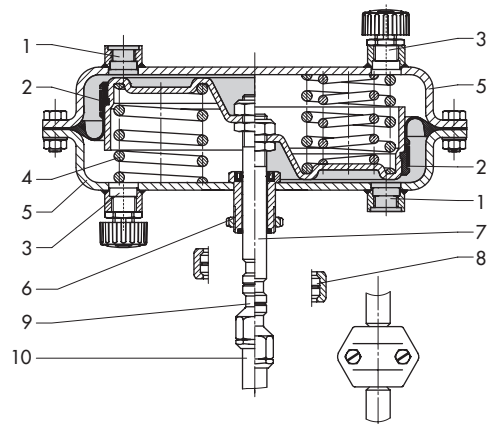

Fig. 6 · Type 3271 (right: with additional springs)

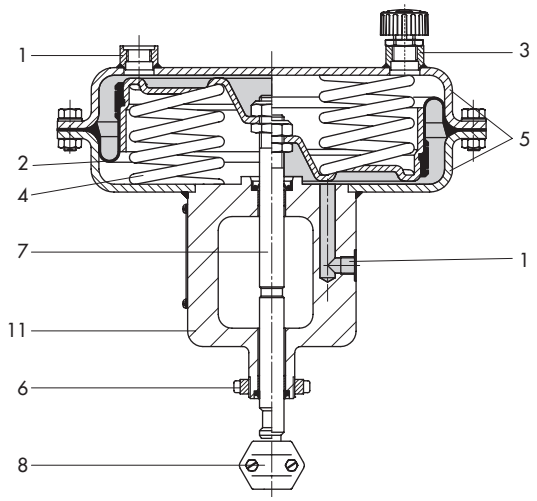

Fig. 7 · Type 3277

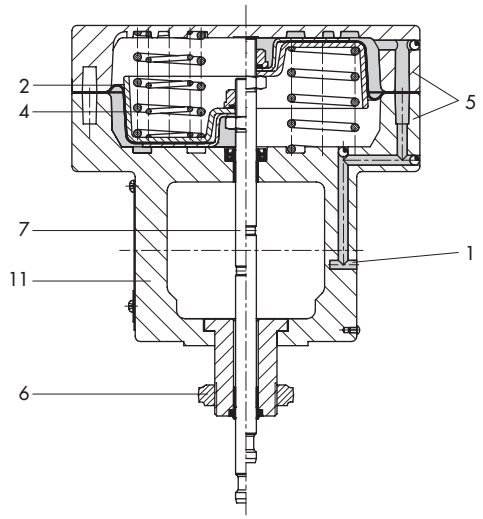

Fig. 8 · Type 3277-5

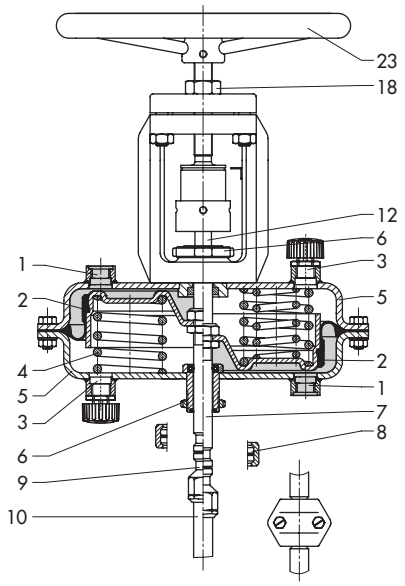

Fig. 9 · Type 3271 with handwheel

Legend

1 Signal pressure connection
2 Diaphragm
3 Vent
4 Springs
5 Diaphragm cases
6 Annular nut
7 Actuator stem
8 Stem connector
9 Coupling nut
10 Plug stem
11 Yoke
12 Actuator stem to handwheel
14 Cap
15 Nut
16 Spindle
17 Plain bearing
18 Lock nut
23 Handwheel

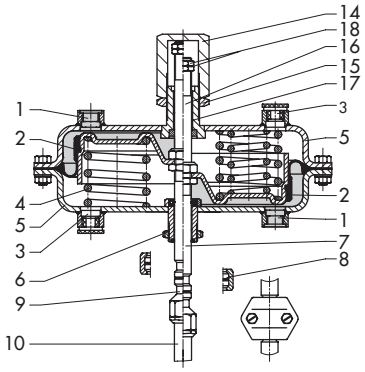

Fig. 10 · Type 3271 with adjustable travel stop

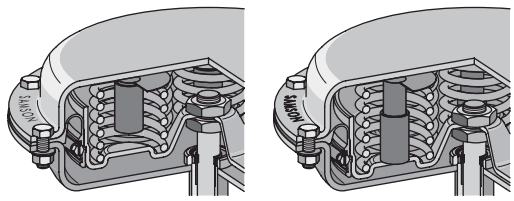

Fig. 11 · Fire-Lock version, in fail-safe position (right)

Table 1a · Technical data for Type 3271 Pneumatic Actuator

Version	**Type 3271**	**Type 3271** Stainless steel	**Type 3277**	**Type 3277** Stainless steel	**Type 3271-52** for micro valve	**Type 3271-5** **Type 3277-5**
Diaphragm area cm²	80 · 240 · 350 · 700[1)]		240 · 350 · 700[1)]		60	120
Max. supply pressure	6 bar · See restrictions in on/off service on page 6					
Permissible temperatures in continuous operation	–35 to 90 °C made of standard material NBR				–35 to 80 °C	–35 to 90 °C
	–40 to 120 °C made of special material EPDM, for air free of oil and grease and actuator versions with 240, 350, and 700 cm²					
	Up to 80 °C in Fire-Lock version (for 240, 350, and 700 cm²)					
Materials						
Rolling diaphragm	NBR (nitrile rubber) with fabric insert				NBR with fabric insert	
	EPDM with fabric insert					
Actuator stem	1.4305				1.4305/1.4571	1.4305
Actuator stem sealing	NBR				NBR	NBR
	EPDM					
Diaphragm cases	Sheet steel, powder-varnish coated	Stainless steel 1.4301	Sheet steel, powder-varnish coated	Stainless steel 1.4301	Die-cast aluminum, powder-varnish coated	

1) Only for initial spring value ≤ 2.1 bar

Table 1b · Technical data for additional handwheel

Version for actuator		**Type 3271-5** **Type 3277-5**	**Type 3271** **Type 3277**
Diaphragm area		120 cm²	240 cm², 350 cm² 700 cm² (only for initial spring value ≤ 2.1 bar)
Materials	Body	Die-cast aluminum, powder-varnish coated	St 37-2, powder-varnish coated
	Spindle	1.4305	Stainless steel 1.4104
	Handwheel	Aluminum, powder-varnish coated	Aluminum

Table 2 Bench ranges for pneumatic actuators up to 700 cm²

Effective diaphragm area [cm²]	Rated travel [mm]	Travel volume at rated travel [dm³]	Dead volume [dm³]	Max. travel [mm][1) 2)]	Bench range [bar] (signal pressure range at rated travel)	Additionally possible spring compression [%]	Operating range with spring compression [bar]	Number of springs	Spring force at 0 mm travel [kN][1)]	Spring force at rated travel [kN]	Thrust [kN] at rated travel and a supply pressure [bar] of					
											1.4	2.0	3.0	4.0	5.0	6.0
60	7.5	0.09	0.1	10.5	0.2...1.0	0	–	2	0.12	0.6	0.24	0.6	1.2	1.8	2.4	3
					0.4...2.0		–	4	0.24	1.2	–		0.6	1.2	1.8	2.4
					1.4...2.3[3)]		–	4	0.84	1.38	–			1.02	1.62	2.22
					2.1...3.3[3)]		–	8	1.26	1.98	–			0.42	1.02	1.62
80	15	0.12	0.13	16	0.2...1.0	12.5	0.3...1.1	3	0.16	0.8	0.32	0.8	1.6	2.4	3.2	4
					0.4...2.0		0.6...2.2	6	0.32	1.6	–		0.8	1.6	2.4	3.2
					0.6...3.0		0.9...3.3	12	0.48	2.4	–			0.8	1.6	2.4
120	7.5	0.09	0.12	9	0.4...0.8	0	–	3	0.48	0.96	0.72	1.44	2.64	3.84	5.04	6.24
					0.8...1.6		–	6	0.96	1.92	–	0.48	1.68	2.88	4.08	5.28
Version for Type 3510 Micro-flow Valve					1.7...2.1[3)]		1.7...2.1	6	2.04	2.52	–		1.08	2.28	3.48	4.68
					2.4...3.0[3)]		2.4...3.0	12	2.88	3.6	–			1.2	2.4	3.6
120	15	0.2	0.10	16 (17)	0.2...1.0	12.5	0.3...1.1	3	0.24	1.2	–	1.2	2.4	3.6	4.8	6
					0.4...2.0		0.6...2.2	6	0.48	2.4	–		1.2	2.4	3.6	4.8
				15 (17)	1.4...2.3[3)]	0	1.4...2.3	6	1.68	2.76	–		0.84	2.04	3.24	4.44
					2.1...3.3[3)]		2.1...3.3	12	2.52	3.96	–			0.84	2.04	3.24
240	15	0.36	0.38	17	0.2...1.0	12.5	0.3...1.1	3	0.48	2.4	0.96	2.4	4.8	7.2	9.6	12
					0.4...2.0		0.6...2.2	6	0.96	4.8	–		2.4	4.8	7.2	9.6
					0.6...3.0		0.9...3.3	12	1.44	7.2	–			2.4	4.8	7.2
350	15	0.53	0.6	22	0.2...1.0	25	0.4...1.2	3	0.7	3.5	1.4	3.5	7	10.5	14	17.5
					0.4...2.0		0.8...2.4	6	1.4	7	–		3.5	7	10.5	14
					0.6...3.0		1.2...3.6	12	2.1	10.5	–			3.5	7	10.5
				15	1.4...2.3[3)]	0	1.4...2.3	6	4.9	8.05	–		2.45	5.95	9.45	13
					2.1...3.3[3)]		2.1...3.3	12	7.35	11.6	–			2.45	5.95	9.45
700	30	2.1	2.4	38	2.1...1.0	25	0.4...1.2	3	1.4	7	2.8	7	14	21	28	35
					0.4...2.0		0.8...2.4	6	2.8	14	–		7	14	21	28
					0.6...3.0		1.2...3.6	12	4.2	21	–			7	14	21
				30	1.4...2.3[3)]	0	1.4...2.3	8	9.8	16.1	–		4.9	11.9	18.9	25.9
					2.1...3.3[3)]		2.1...3.3	12	14.7	23.1	–			4.9	11.9	18.9
					2.35...3.8[3) 4)]		2.35...3.8	15	16.5	26.6	–			1.4	8.4	15.4
					2.6 ...4.3[3) 4)]		2.6...4.3	18	18.2	30.1	–				4.9	11.9

1) Based on lower bench range value, taking zero travel (to unseat the plug) into account
2) Zero travel as in Table 3 depending on fail-safe action
3) Pretensioned springs
4) Version not available with additional handwheel

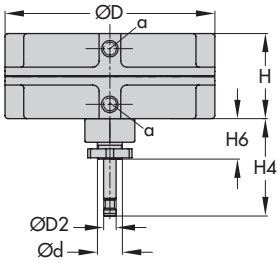

Fig. 12 · Type 3271-5

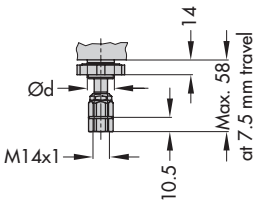

Fig. 12a · Types 3271-5/3277-5 with 7.5 mm travel for Type 3510 Micro Valve

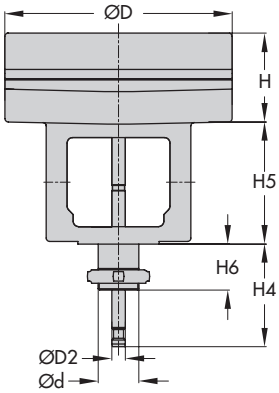

Fig. 13 · Type 3277-5

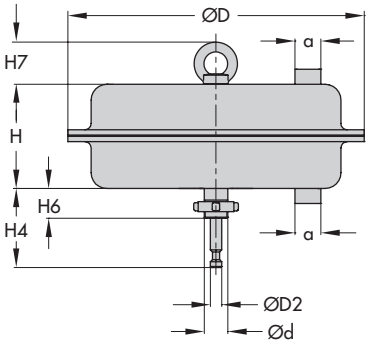

Fig. 14 · Type 3271 (700 cm^2 version with lifting ring)

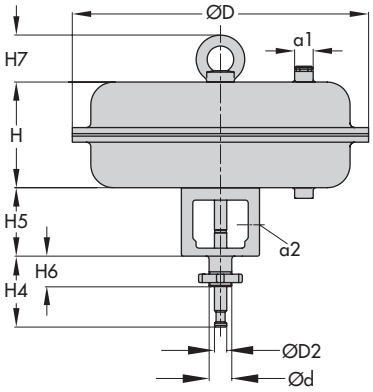

Fig. 15 · Type 3277 (700 cm^2 version with lifting ring)

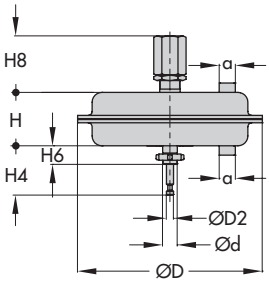

Fig. 16 · Type 3271 with adjustable travel stop

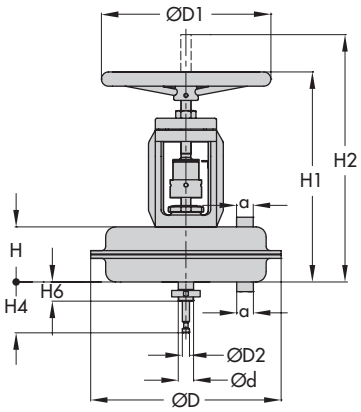

Fig. 17 · Type 3271 with additional handwheel

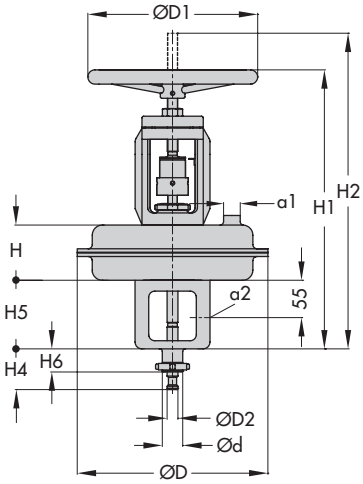

Fig. 18 · Type 3277 with additional handwheel

Table 3 · Dimensions and weights

Actuator	Type	3271	3271	3271	3271			3277	3277		
Version		-52		-5				-5			
Diaphragm area	cm^2	60	80	120	240	350	700	120	240	350	700
Height	H	63	62	69	62	82	134	70	65	85	135
	H1	–			300	320	430	–	400	420	530
	$H2_{max}$	–		208	345	365	515	–	445	465	615
	H4ratedFA	51	75	75	75	75	90	78	75	75	90
	$H4_{max}$FA	52.5	78	78	78	78	95	78	78	78	90
	$H4_{max}$FE	52.5	78	78	78	85	104	78	78	85	104
	H5	–						84	101	101	101
	H6	23.8	34	34	34	34	34	14	34		
	H7	–					62	–			65
	H8	–			75	85	115	–			
Diameter	∅ D	120	150	168	240	280	390	168	240	280	390
	∅ D1	–	–	80	180	250	250	–	180	250	250
	∅ D2	10	10	10	10	16	16	10	16		
∅ d (thread)		20	30					20	30		
a (optional)		G 1/4		G 1/8	G 1/4	G 3/8		G 1/8	G 1/4	G 3/8	
		1/4 NPT		1/8 NPT	1/4 NPT	3/8 NPT					
	a2	–						–	G 3/8		
Weight in kg											
Without handwheel		1.3	2	2	5	8	22	3.2	9	12	26
With handwheel		–		4	9	13	27	–	13	17	31

Throttling or on/off service

In throttling service, the pneumatic actuators can be used for supply pressures up to max. 6 bar.

In on/off service, the supply pressure must be reduced.

For fail-safe action "Actuator stem retracts (FE)", the permissible supply pressure must not exceed the upper bench range value by more than 3 bar.

Actuators to be used with reduced supply pressures are labeled accordingly.

Example

Bench range	Fail-safe action	Max. supply pressure
0.2 … 1.0 bar	Actuator stem retracts	4 bar
0.4 … 2.0 bar		5 bar
0.6 … 3.0 bar		6 bar

For fail-safe action "Actuator stem extends (FA)" and travel stop, the supply pressure must not exceed the upper bench range value by more than 1.5 bar.

Ordering text

Actuator	Type 3271 or Type 3277 for direct attachment of accessories
Optionally	Handwheel Travel stop Fire-Lock version
Diaphragm area	… cm^2
Travel	… mm
Bench range	… bar
Fail-safe action	Actuator stem extends (FA) or Actuator stem retracts (FE)
Signal pressure connection	G … / … NPT
Rolling diaphragm	NBR/EPDM

Specifications subject to change without notice.

SAMSON AG · MESS- and REGELTECHNIK
Weismüllerstraße 3 · 60314 Frankfurt am Main · Germany
Phone: +49 69 4009-0 · Fax: +49 69 4009-1507
Internet: http://www.samson.de

Pneumatic Actuators 1400, 2800, and 2 x 2800 cm²

Type 3271

Hand-operated Actuator Type 3273

Application

Linear actuator for attachment to final control elements, particularly suitable for Series 240, 250, and 280 Control Valves

Diaphragm area **1400 and 2800 cm²**

Travel **Up to 160 mm**

The Type 3271 Pneumatic Actuators are diaphragm actuators equipped with a rolling diaphragm and internal springs.

Special features

- Low overall height
- Low friction
- Various bench ranges by varying the number of springs and their compression
- No special tools required to change the bench range and to reverse the actuator action (also for tandem actuator and version with handwheel)
- Continuous operation at temperatures from –35 to +90 °C
- Type 3273 Hand-operated Actuator for travels up to 80 mm

Versions

– **Type 3271 Pneumatic Actuator** (Fig. 1) · Effective diaphragm area of 1400 cm² with 60 mm travel (1400-60) or effective diaphragm area of 2800 cm² with 160 mm travel

– **Type 3271 Pneumatic Tandem Actuator** (Fig. 2) · Effective diaphragm area of 2 x 2800 cm²

– **Type 3271 Pneumatic Actuator with Type 3273 Hand-operated Actuator** · For travels up to 80 mm using side-mounted handwheel (Fig. 10), effective diaphragm area of 1400 or 2800 cm²

– **Type 3271 Pneumatic Actuator with Handwheel** · Using side-mounted handwheel (Fig. 11) for travels up to 160 mm, effective diaphragm areas of 2800 or 2 x 2800 cm²

– **Type 3271 Actuator with Travel Stop** (sectional drawing 5) Minimum or maximum travel mechanically adjustable for 1400 cm² versions with 60 mm travel and 2800 cm² versions as well as 2 x 2800 cm² tandem actuators

Further versions

For other process media (e.g. water)

For high temperatures up to 120 °C or low temperatures down to –40 °C · On request

Type 3273 · **Hand-operated Actuator** without pneumatic actuator, operated using side-mounted handwheel for travels up to 80 mm · On request

Fig. 1 · Type 3271 (1400-60) with Type 3251 Control Valve

Fig. 2 · Type 3271 Tandem Actuator with 2 x 2800 cm²

Information Sheet for Actuators **T 8300 EN**

Mounting and Operating Instructions for Type 3271 Pneumatic Actuator **EB 8310 EN**

Edition June 2004

Data Sheet **T 8310-2 EN**

Principle of operation

The signal pressure p_{st} generates a force $F = p_{st} \cdot A$ on the diaphragm area A (2). This force is balanced by the actuator springs (4). Taking into account the rated travel, the number of springs and their compression determine the bench range. The travel H is proportional to the signal pressure p_{st}. The operating direction of the actuator stem (7) depends on the arrangement of the springs.

The stem connector (8) connects the actuator stem (7) with the plug stem (10) of the valve.

Fig. 10 shows the side-mounted **Type 3273 Hand-operated Actuator** for actuators with effective diaphragm areas of 1400 and 2800 cm^2 and a maximum **travel of up to 80 mm**. The handwheel (23) is fixed to the worm-geared shaft (20) and moves the actuator stem over the worm-geared wheel (21) and the threaded bushing (22).

A side-mounted handwheel as illustrated in Fig. 11 is available for valves with **120 mm travel**.

The adjustable **mechanical travel stop** (Fig. 5) is suitable for actuator version 1400-60 as well as 2800 cm^2 and tandem actuators. The actuator travel can be limited by up to 50 % in both directions (actuator stem "extends" or "retracts") and permanently adjusted.

The tandem actuator (Fig. 6) contains two coupled diaphragms; they produce a positioning force that is twice as high as the force of a single-acting actuator.

Actuators are available with the following fail-safe actions:

"Actuator stem extends (FA)"

The springs cause the actuator stem to move to the lower end position (sectional drawings, right) when the diaphragm is relieved of pressure or when the supply air fails.

"Actuator stem retracts (FE)"

The springs cause the actuator stem to retract (sectional drawings, left) when the diaphragm is relieved of pressure or when the supply air fails.

Legend

1	Signal pressure connection	14	Cap
2	Diaphragm	15	Nut
3	Vent	16	Spindle
4	Springs	17	Plain bearing
5	Diaphragm cases	18	Lock nut
6	Annular nut	20	Worm-geared shaft
7	Actuator stem	21	Worm-geared wheel
8	Stem connector	22	Threaded bushing
9	Coupling nut	23	Handwheel
10	Plug stem		

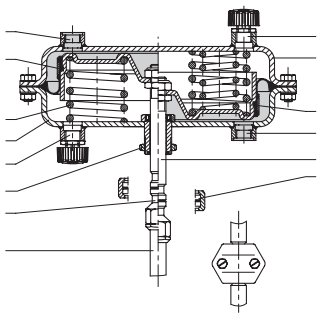

Fig. 3 · Sectional drawing of Type 3271Pneumatic Actuator (right diaphragm half with additional springs)

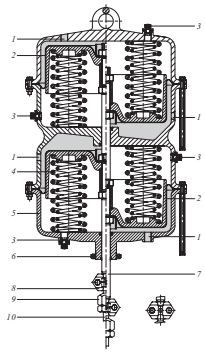

Fig. 4 · Tandem actuator with 2 x 2800 cm^2

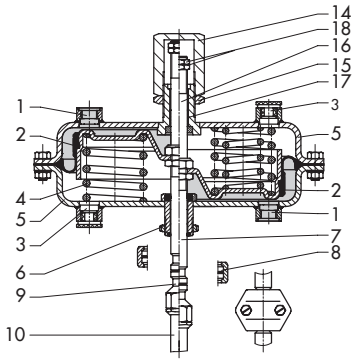

Fig. 5 · Type 3271 Actuator with adjustable travel stop

Throttling or on/off service

In throttling service, the Type 3271 Pneumatic Actuators can be used for supply pressures up to max. 6 bar.

In on/off service, the supply pressure must be reduced.

For fail-safe action "Actuator stem retracts (FE)", the permissible supply pressure must not exceed the upper bench range value by more than 3 bar.

Actuators to be used with reduced supply pressures are labeled accordingly.

Example

Bench range	Fail-safe action	Max. supply pressure
0.2 … 1.0 bar	Actuator stem retracts	4 bar
0.4 … 2.0 bar		5 bar
0.6 … 3.0 bar		6 bar

For fail-safe action "Actuator stem extends (FA)" and travel stop, the supply pressure must not exceed the upper bench range value by more than 1.5 bar.

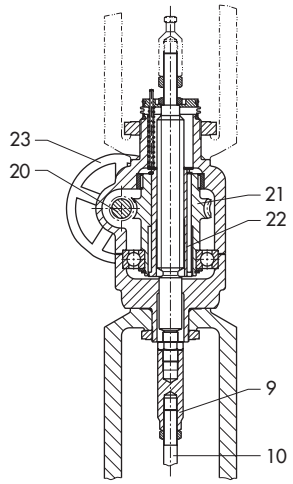

Fig. 6 · Type 3273 Hand-operated Actuator with side-mounted handwheel for max. 80 mm travel, up to 80 kN

Table 1a · Technical data for Type 3271 Pneumatic Actuator

Version cm²	**1400-60**	**2800**	**2 x 2800**
Maximum supply pressure	6 bar[1)]	6 bar[1)]	
Permissible temperatures in continuous operation	Standard material NBR –35 to 90 °C	Standard material NBR –35 to 90 °C	
	Special material EPDM (for air free of oil and grease) –35 to 120 °C		
Materials			
Rolling diaphragm	NBR (nitrile rubber) Butyl with fabric insert	NBR with fabric insert	
	EPDM with fabric insert		
Actuator stem	1.4571	1.4548.4	
Actuator stem sealing	NBR (nitrile rubber	NBR	
	EPDM		
Diaphragm cases	Sheet steel, powder-varnish coated	EN-JS1030 (GGG-40), powder-varnish coated	

1) Observe restrictions in on/off service as specified above

Table 1b · Technical data for Type 3273 Hand-operated Actuator

Version	**3273** (Fig. 10)	**3273** (Fig. 11)
Max. travel range	80 mm	160 mm
Permissible force	84 kN	210 kN
Permissible temperature	100 °C	100 °C
Materials		
Body	EN-JS1030 (GGG-40)	EN-JS1030 (GGG-40)
Spindle and threaded nut	1.4104/G-CuSn12Pb	EN-GJS-500-7 (GGG-50)/1.0503
Handwheel	Aluminum	EN-JL1040 (GG-25)

Table 1c · Available versions

Version	**1400-60**	**2800 cm²**	**2 x 2800 cm²**
Travel stop, on both sides	•	•	•
Type 3273 Hand-operated Actuator, max. 80 mm travel	•	• (max. 3 bar)	–
Side-mounted Type 3271 Hand-operated Actuator, max. 120 mm travel	–	•	•

Table 2 · Bench ranges for 1400 and 2800 cm² Pneumatic Actuators · All pressures in bar (gauge)

Values highlighted in gray apply to standard operation, i.e. operation at rated travel. The maximum travel can be achieved by increasing the signal pressure. Pretensioned springs cannot be used with fail-safe action "Actuator stem retracts" for Series 240, 250, and 280 Control Valves.

Effective diaphragm area [cm²]	Rated travel [mm]	Travel volume at rated travel [dm³]	Dead volume [dm³]	Max. travel [mm][1)]	Bench range [bar] (signal pressure range at rated travel)	Additionally possible spring compression [%]	Operating range with spring compression [bar]	Number of springs	Spring force at 0 mm travel [kN][2)]	Spring force at rated travel [kN][2)]	Thrust [kN][2)] at rated travel and a supply pressure [bar] of					
											1.4	2.0	3.0	4.0	5.0	6.0
1400	60	8.3	5.7	80	0.2...1.0	25	0.4...1.2	6	2.8	14	5.6	14	28	42	56	70
					0.4...2.0		0.8...2.4	12	5.6	28	–		14	28	42	56
					0.5...2.5		1.0...3.0	18	7	35	–		7	21	35	49
					1.1...2.4		1.4...2.7	18	15.4	33.6	–		8.4	22.4	36.4	50.4
					1.3...2.8		1.7...3.2	24	18.2	39.2	–		2.8	16.8	30.8	44.8
2800	120	33	16.5	160	0.2...1.0	25	0.4...1.2	3	5.6	28	11.2	28	56	84	112	140
					0.4...2.0		0.8...2.4	6	11.2	5.6	–		28	56	84	112
					0.5...2.5		1.0...3.0	9	14	70	–		14	42	70	98
					0.6...3.0		1.2...3.6	12	16.8	84	–			28	56	84
					0.9...1.6	25[4)]	1.1...1.8	6	25.2	44.8	–	11.2	39.2	67.2	95.2	123
					1.0...2.1		1.25...2.35	9	28	58.8	–		25.2	53.2	81.2	109
					1.1...2.6		1.5...3.0	12	30.8	72.8	–		11.2	39.2	67.2	95.2
					1.1...2.3	25	1.4...2.6	6	30.8	64.4	–		19.6	47.6	75.6	104
					1.2...2.8		1.6...3.2	9	33.6	78.4	–		5.6	33.6	61.6	89.6
					1.3...3.3		1.8...3.8	12	36.4	92.4	–			19.6	47.6	75.6
2 x 2800	120	66	33	160	0.2...1.0	25	0.4...1.2	6	11.2	56	22.4	56	112	168	224	280
					0.4...2.0		0.8...2.4	12	22.4	11.2	–		56	112	168	224
					0.5...2.5		1.0...3.0	18	28	140	–		28	84	140	196
					0.6...3.0		1.2...3.6	24	33.6	168	–			56	112	168
					0.9...1.6	25[4)]	1.1...1.8	12	50.4	89.6	–	22.4	78.4	134.4	190.4	246
					1.0...2.1		1.25...2.35	18	56	117.6	–		50.4	106.4	162.4	218
					1.1...2.6		1.5...3.0	24	61.6	145.6	–		22.4	78.4	134.4	190.4
					1.1...2.3	25	1.4...2.6	12	61.6	128.8	–		39.2	95.2	151.2	208
					1.2...2.8		1.6...3.2	18	67.2	156.8	–		11.2	67.2	123.2	179.2
					1.3...3.3		1.8...3.8	24	72.8	184.8	–			39.2	95.2	151.2

1) Based on lower bench range value, not taking zero travel (to unseat the plug) into account (see Table 3a)
2) Specified forces refer to the bench range
3) Springs are already pretensioned
4) The maximum compression at 50 % rated travel is 50 %

Table 3 · Dimensions and weights

Table 3a · Versions without handwheel

Actuator	cm^2	**1400-60**	**2800**	**2 x 2800**
Height	H	197	520	1020
	$H4_{Rated}FA$	165	315	
	$H4_{max}FA$	169	325	
	$H4_{max}FE$	185	355	
	H6	54	85	
	H7	90	110	
	H8	180	500	
Diameter	∅ D	530	770	
	∅ D2	22	40	
∅ d (thread)		60 x 1.5	100 x 2	100 x 2
a (optional)		G ¾	G 1	
		¾ NPT	1 NPT	
Weight in kg				
Without handwheel		70	450	950

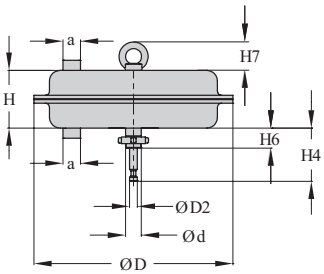

Fig. 7 · Type 3271 Actuator, version 1400-60

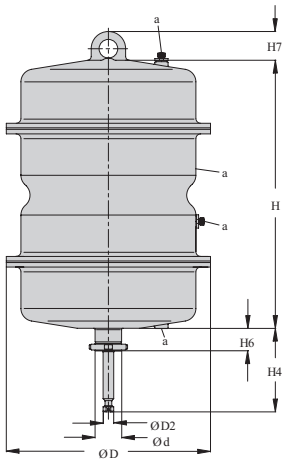

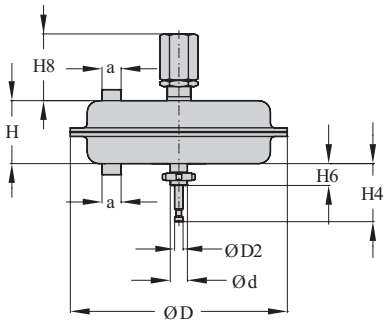

Fig. 8 · Version with mechanical travel stop

Fig. 9 · Type 3271 as tandem actuator

Table 3b · Type 3273 Hand-operated Actuator with side-mounted handwheel · Travel ≤ 80 mm

Control valve	DN	50 … 100		125 … 150		200 … 250		300 … 400	
Seat bore	mm	≤ 100		≤ 150		≤ 200		≤ 200	
Travel	mm	30		60		60		60	
Actuator	cm^2	1400-60	2800	1400-60	2800	1400-60	2800	1400-60	2800
H3	mm	932	1202	1032	1202	1032	1202	1117	1222
H5	mm	295	480	395	480	395	480	480	500
H9	mm	395	480	395	480	395	480	395	480
Weight with actuator	kg	140	575	155	575	155	575	175	575
Weight w/o actuator	kg	70		70		70		70	

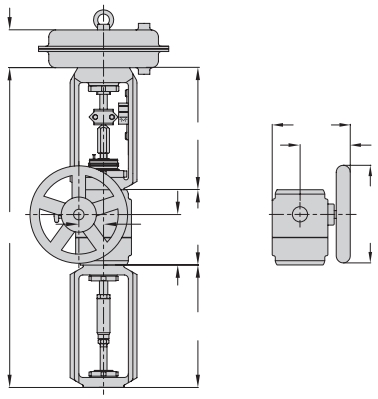

Fig. 10 · 1400 and 2800 cm^2 version
for max. 80 mm travel, up to 80 kN

Table 3c · Pneumatic actuator and hand-operated actuator with side-mounted handwheel · Travel up to 160 mm

Actuator	cm^2	2800	2 x 2800
H10	mm	1105	1105
H11	mm	220	220
Weight w/o actuator	kg	250	250

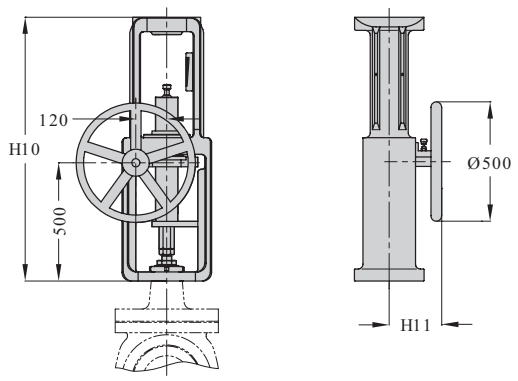

Fig. 11 · 1400 and 2800 cm^2 version
for travel >60 to 120 mm

Ordering text

Actuator	Type 3271 Handwheel Travel stop Tandem actuator
Diaphragm area	… cm^2
Travel	… mm
Bench range	… bar
Fail-safe action	Actuator stem extends/retracts
Signal pressure connection	G … / … NPT
Rolling diaphragm	NBR/EPDM

Specifications subject to change without notice.

zentrische Absperrklappe mit EPDM-Sitz und Edelstahl-Scheibe BR 10z

Anwendung:

Dichtschliessende zentrische Absperrklappe mit EPDM - Auskleidung für korrosive Anwendungen in der chemischen Industrie:

- Nennweite DN 50 bis DN 500 sowie 2“ bis 20“,
- Nenndruck PN 10,
- Temperaturen -40°C bis 120°C,

Das Stellgerät besteht aus einer EPDM - ausgekleideten Klappe mit einem pneumatischen Schwenkantrieb, einem Handhebel oder einem Handgetriebe. Die im Baukastensystem ausgeführten Geräte sind mit verschiedenen Zusatzteilen kombinierbar und weisen folgende besonderen Eigenschaften auf:

- einteiliges Gehäuse aus Grauguss GG 25, Epoxy - beschichtet
- Klappenscheibe und Welle Edelstahl WN 1.4408
- Sitzring aus EPDM
- hoher k_v Wert durch strömungsgünstiges Scheibendesign,
- gute Regelcharakteristik,
- langer Klappenhals erlaubt den problemlosen Einbau auch in isolierte Leitungen,
- Anbaumöglichkeiten nach DIN/ISO 5211,
- Baulänge Reihe 20 nach EN 558-1 (K1 nach DIN 3202).

Ausführungen:

EPDM-ausgekleidete Klappe DN 50 bis DN 500, PN 10, wahlweise in folgenden Ausführungen:

- Handbetätigte Klappe mittels Handhebel mit Verriegelung (siehe DB 10z-02_DE),
- Handbetätigte Klappe mittels Handgetriebe,
- Absperrklappe mit pneumatischem Schwenkantrieb,
- Regelklappe vorzugsweise mit pneumatischem Membranschwenkantrieb

Sonderausführungen:

- Elektrischer Drehantrieb,
- Klappenscheibe aus Sphäroguss, Nylon ummantelt,
- Klappenscheibe aus Sonderwerkstoff.

Bild 1 - Absperrklappe BR 10z mit Handhebel

Bild 2 - Absperrklappe BR 10z mit Handgetriebe

Absperrklappe
BR 10z

Funktions- und Wirkungsweise:

Die Absperrklappe kann bidirektional durchströmt werden. Die Stellung der Klappenscheibe (3) bestimmt die Durchflussmenge mit der gegenüber dem Sitzring (2) freigegebene Fläche.
Die Welle der Klappenscheibe wird durch einen Wellendichtring (5) aus NBR abgedichtet.
Die Abdichtung zwischen Sitzring (3) und Gehäuse (1) erfolgt durch den elastischen EPDM - Sitzring (2).
Durch die zentrische Lagerung der Klappenwelle und durch ein strömungsgünstiges Design der Klappenscheibe wird eine gute Regelcharakteristik und ein hoher k_v Wert erreicht.

Stellklappe mit Antrieb " Feder schliesst ":
Die Federn schliessen die Klappe bei sinkendem Stelldruck, bzw. bei Ausfall der Hilfsenergie. Das Öffnen der Klappe erfolgt bei steigendem Stelldruck gegen die Kraft der Federn.

Stellklappe mit Antrieb " Feder öffnet ":
Die Federn öffnen die Klappe bei sinkendem Stelldruck, bzw. bei Ausfall der Hilfsenergie. Das Schliessen der Klappe erfolgt bei steigendem Stelldruck gegen die Kraft der Federn.

Allgemeine Technische Daten:

Nennweite	DN 50 bis DN 500 sowie 2" bis 20"
Nenndruck	PN 10
Anschluss	montierbar zwischen Flansche PN 10 oder ANSI 150 lbs
Temperaturbereich	-40°C bis 120°C
Sitzdichtigkeit	DIN 3230 T3, BO Leckrate 1

Tabelle 1 - technische Daten

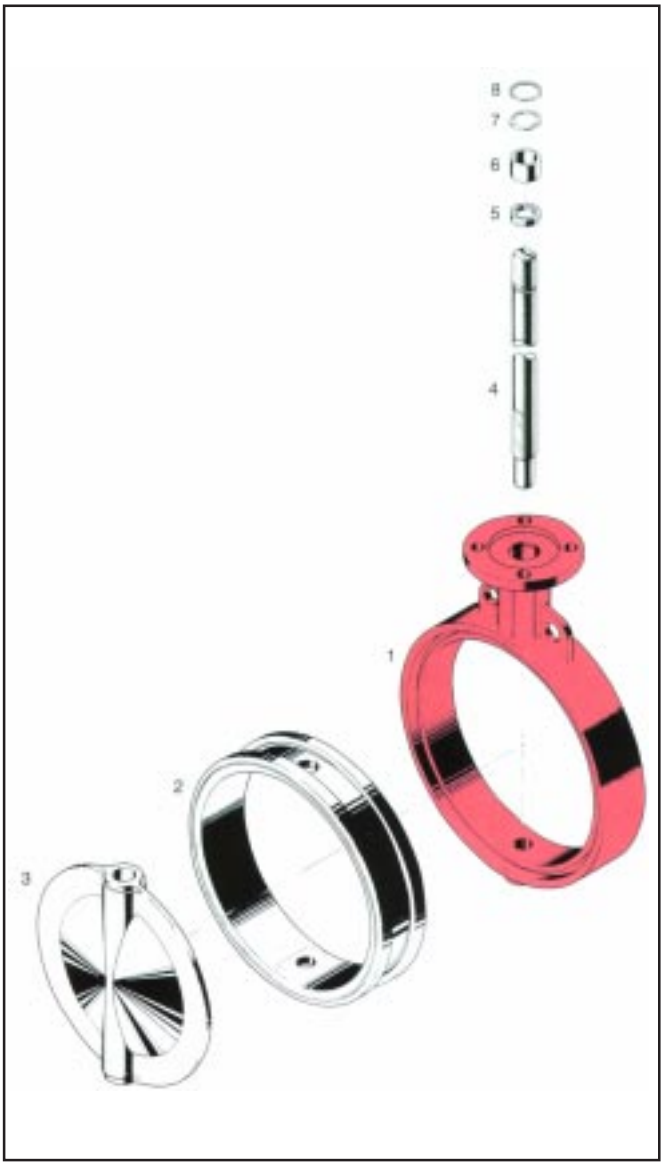

Bild 3 - EPDM - ausgekleidete Absperrklappe

Werkstoffe:

Gehäuse	GG 25
Sitzring	EPDM
Klappenscheibe	WN 1.4408
Welle	WN 1.4408
Wellenlager	POM
Wellendichtung	NBR
Gehäuse-Beschichtung	Epoxy - beschichtet

Tabelle 2 - Werkstoffe (WN = Werstoffnummer)

Pos.	Bezeichnung	Pos.	Bezeichnung
1	Klappengehäuse	5	Wellendichtung
2	Sitzring	6	Wellenlager
3	Klappenscheibe	7	Stahlring
4	Klappenwelle	8	Sicherungsring

Tabelle 3 - Stückliste

k_V Werte und zugehörige Öffnungswinkel:

DN		Stellwinkel φ								
mm	inch	10°	20°	30°	40°	50°	60°	70°	80°	90°
50	2"	0,9	6	14	23	37	53	72	98	124
65	2,5"	1,3	10	21	37	58	92	140	192	243
80	3"	1,7	13	30	53	83	132	230	313	397
100	4"	2,6	23	53	94	147	236	427	603	723
125	5"	4,3	37	84	146	231	368	667	986	1183
150	6"	5,2	48	111	194	304	488	882	1326	1591
200	8"	10,3	88	207	362	585	876	1601	2444	2852
250	10"	16,3	139	329	574	925	1471	2535	3892	4670
300	12"	23,2	202	477	864	1371	2204	3778	5789	6946
350	14"	29,2	257	650	1135	1848	2910	5108	7632	9063
400	16"	38,7	341	861	1504	2448	3855	6766	10115	12011
450	18"	49,9	436	1102	1924	3133	4933	8656	12467	14804
500	20"	61,9	544	1372	2326	3901	6144	10780	16178	19212

Tabelle 4 - kv-Werte

Wirkbild und Stellwinkel:

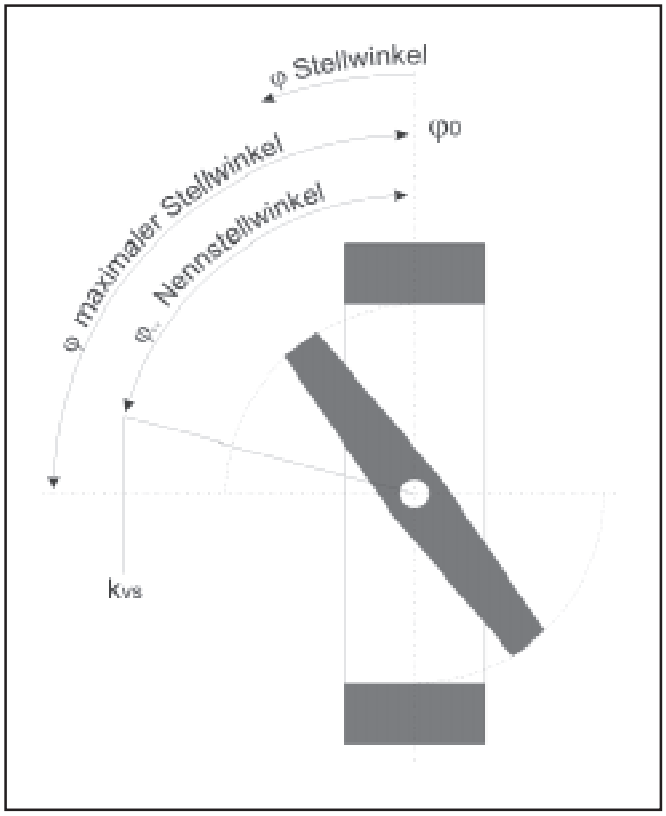

Bild 4 - Wirkbild und Bezeichnung der Stellwinkel

Drehmomente und Losbrechmomente:

Anwendungsfall A: Wasser, schmierfähige Medien.
Temperaturen: 0 - 80°C,
Betätigung der Armatur einmal pro Woche.

Anwendungsfall B: Alle anderen schmierfähigen Anwebdungen. Temperaturen: -40 - 120°C,
Betätigung der Armatur 3 - 6 pro Woche.

Anwendungsfall C: Nicht schmierfähige Anwendungen.
Temperaturen: -40 - 120°C,

DN		Anwendungsfall A Δp (bar)					Anwendungsfall B Δp (bar)					Anwendungsfall C Δp (bar)				
mm	inch	0	3,5	7	10	12	0	3,5	7	10	12	0	3,5	7	10	12
50	2"	12	13	13	14	14	14	14	15	15	16	17	17	18	19	20
65	2,5"	19	20	21	22	23	21	22	23	24	25	26	28	29	30	31
80	3"	25	27	28	30	31	28	29	31	33	34	35	37	39	41	42
100	4"	39	41	44	46	48	42	45	48	51	53	53	57	60	64	66
125	5"	58	63	69	75	78	63	69	76	82	85	79	87	95	102	107
150	6"	71	83	94	103	107	79	91	103	113	118	98	114	129	141	148
200	8"	134	152	170	188	197	147	167	186	206	216	184	208	233	258	271
250	10"	213	230	259	288	298	221	253	285	316	332	277	316	356	396	415
300	12"	305	351	398	444	467	336	386	437	488	514	419	483	547	610	642
350	14"	431	509	586	663	-	475	559	644	729	-	593	699	805	911	-
400	16"	524	658	791	925	-	576	723	870	1017	-	720	904	1088	1271	-
450	18"	606	812	1017	1223	-	667	893	1119	1345	-	833	1116	1398	1681	-
500	20"	791	1058	1325	1592	-	870	1164	1458	1752	-	1088	1455	1822	2189	-

Tabelle 5 - erforderliche Drehmomente Md

Maße der Absperrklappe:

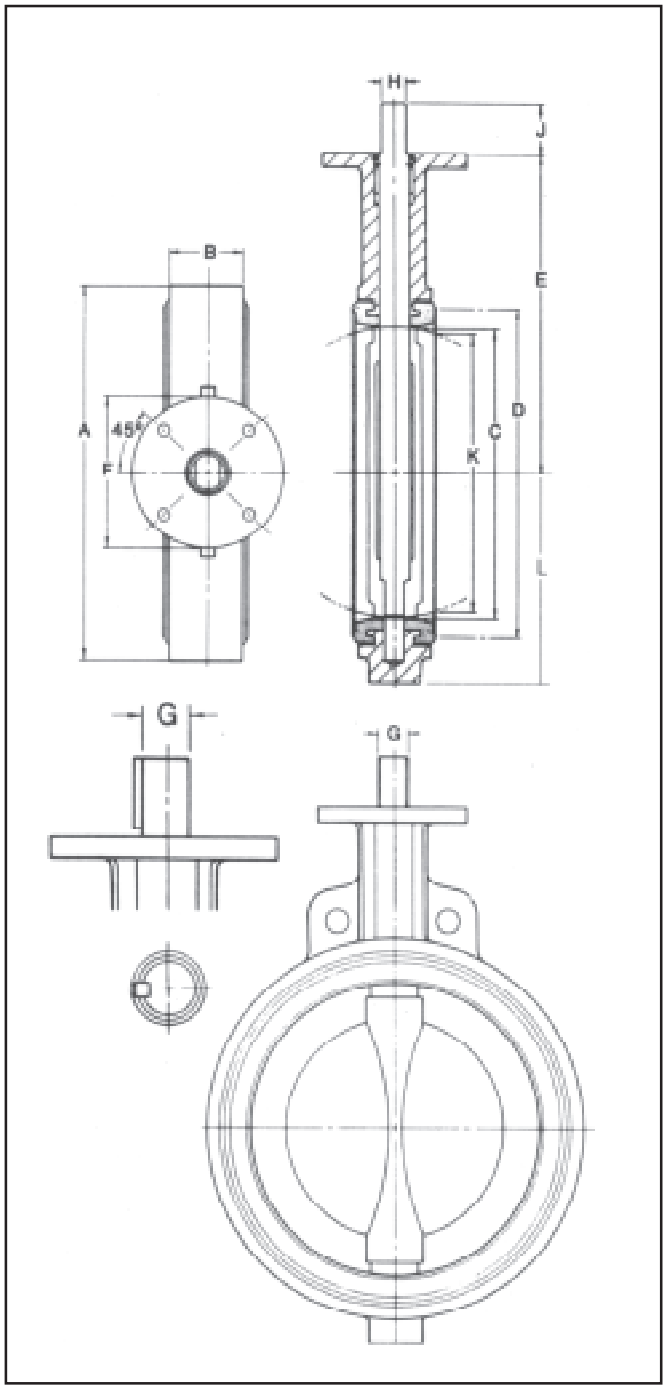

Bild 5 - Maßbild

DN		50 2"	65 2,5"	80 3"	100 4"	125 5"	150 6"	200 8"	250 10"	300 12"
A		94	106	124	154	181	206	267	324	378
B		43	46	46	52	56	56	60	68	78
C		51	64	76	102	127	146	197	248	298
D		72	85	102	131	156	178	241	291	342
E		140	152	159	178	190	203	241	273	311
F		90	90	90	90	90	90	150	150	150
G		14	14	14	16	19	19	22	30	30
Kopf-flansch		F07	F07	F07	F07	F07	F07	F12	F12	F12
	Øk	70	70	70	70	70	70	125	125	125
	Z	4	4	4	4	4	4	4	4	4
	Ø L	9,5	9,5	9,5	9,5	9,5	9,5	14	14	14
H		10	10	10	11	13	13	16	22	22
J		32	32	32	32	32	32	32	50	50
K		33	49	65	91	118	138	189	242	291
L		51	59	67	87	107	120	153	188	213

DN		250 14"	400 16"	450 18"	500 20"
A		430	484	537	591
B		78	102	108	127
C		337	387	438	489
D		388	442	495	548
E		346	375	406	438
F		150	150	210	210
G		35	35	50	50
Kopf-flansch		F12	F12	F16	F16
	Øk	125	125	165	165
	Z	4	4	4	4
	Ø L	14	14	21	21
J		51	51	64	64
Schlüsselweite		10x10	10x10	10x12	10x12
K		331	377	428	475
L		238	273	305	348

Tabelle 6 - Maße in mm

Auswahl und Auslegung des Stellgerätes:

1. Berechnung des geeigneten k_V-Wertes.
2. Auswahl von DN und k_{VS}-Wert nach Tabelle 5.
3. Überprüfung des Einsatzes.
4. Auswahl eines geeigneten Stellantriebes.

Bestelltext:

zentrische Absperrklappe mit EPDM-Liner Typ: BR 10z,
DN . . . . / PN . . . . , evtl.. Sonderausführung
Handgetriebe bzw. Stellantrieb Fabrikat: . . . .
Stelldruck: . . . . bar, Sicherheitsstellung: . . . .
Grenzsignalgeber Fabrikat: . . . .
Magnetventil Fabrikat: . . . .
Stellungsregler: . . . .
Sonstiges: . . . .

Für Ihre speziellen Anforderungen steht Ihnen unser Team gerne mit Rat und Tat zur Seite.

Pfeiffer Chemie-Armaturenbau GmbH
Hooghe Weg 41 • 47906 Kempen
Telefon: 02152 / 2005-0 • Telefax: 02152 / 1580
E-Mail: vertrieb@pfeiffer-armaturen.com • Internet: www.pfeiffer-armaturen.com

Änderungen der Anforderungen und Ausführungen sind vorbehalten

Pfeiffer
Chemie-Armaturenbau GmbH

Cast Iron / Stainless Steel
Ball Valve Series 76a
ANSI - Version

Application:

Tight-closing ball valve, especially with high process demand in chemical plants:

- nominal diameters DN 1/2” to 12”,
- nominal pressures ANSI 150 and 300 lbs,
- temperatures -10°C to 200°C.

The control equipment consists of a ball valve and a pneumatic quarter-turn actuator or a hand-lever. The valves, which are of modular construction, may be combined with various optional parts and have the following features:

- valve body made of stainless steel or cast iron,
- ball and shaft made of stainless steel,
- exchangeable bore seal in PTFE,
- stem sealing by means of a cup spring live-loaded packing,
- blowout-proof stem,
- fire-safe version acc. to British Standard BS 6755 Part 2,
- face to face serie 1 acc. to ANSI B16.10,
- connecting flange for actuators acc. to DIN ISO 5211.

Versions:

Ball valve Series 76a for DN 1/2” to 12”, ANSI 150 / 300 lbs, alternatively in the following designs:

- ball valve with hand-lever,
- ball valve with gear-box
- ball valve with pneumatic quarter-turn actuator, (for details see respective data sheet).

Special designs:

- body and further components in special material
- double stuffing box with leakage detecting connection,
- double bearing assembly
- heating jacket
- flange groove according to DIN 2512,
- control ball valve due to characteristic seatring
- metallic seatring
- high temperature version

Fig. 1 - Ball valve Series 76a with hand lever

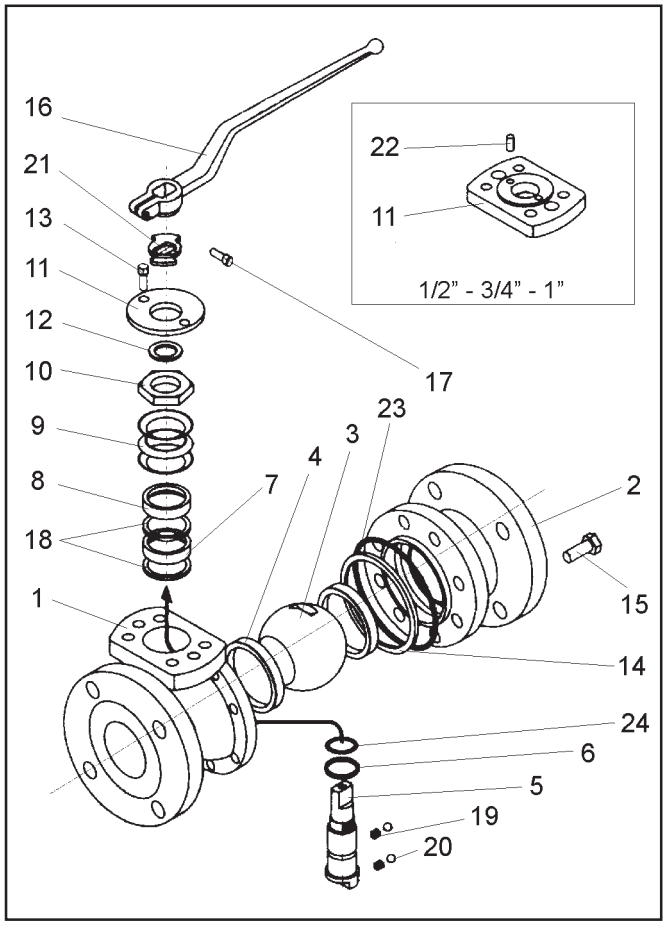

Fig. 2 - Ball valve explosion drawing

Pos.	Description	Pos.	Description
1	Main body	13	Screw
2	Body	14	Body seal
3	Ball	15	Screw
4	Set of sealing rings	16	Hand lever
5	Control shaft	17	Screw
6	Thrust washer	18	Bearing ring
7	Packing ring	19	Spring washer
8	Thrust washer	20	Ball
9	Spring washer	21	Stop plate
10	Nut	22	Stop pin
11	Cover	23	Body seal
12	Cover ring	24	O-ring

Table 1 - Parts list

Additional equipment and add-on pieces:

For the control valves, the following accessories are available either individually or in combination:

- extension to stem,
- pneumatic and electric quarter-turn actuators
- exchangeable pneumatic quarter-turn actuator which can be equipped with limit switches and solenoid valves,
- positioner (with optional control ball valve),
- limit switches,
- solenoid valves
- filter regulator,

further accessories are available on request for customer specifications

Principle of operation:

The ball valves of the series 76a permit full flow through the valve in either direction.
The ball (3) with its cylindrical passage rotates around the middle axis. The opening angle of the ball determines the flow through the free area between the body (1) and passage.
The stem is externally equipped with a hand lever. Optionally a pneumatic actuator or gear operator can be fitted.
The sealing of the ball (3) is provided by exchangeable seat rings (4). The ball stem is sealed by a PTFE-packing. The live-loading is carried out by cup springs (9) positioned above the packing.

Ball valve with actuator " spring closes ":
Reducing air supply causes valve closing through releasing the springs, respectively in case of air failure.
Increasing air supply forces the valve to open against the springs.

Ball valve with actuator " spring opens ":
Reducing air supply causes valve opening through releasing the springs, respectively in case of air failure.
Increasing air supply forces the valve to close against the springs.

General technical data:

Nominal diameter	1/2" to 12"
Nominal pressure	ANSI 150 / 300 lbs
Temperature range	-10°C to 200°C
Ball sealing	PTFE
Leakage rate	Leakage rate acc. BS 6755 part 1
Flanges	ANSI Class 150 and 300
Stuffing box packing	live loaded PTFE - V-ring packing

Table 2 - technical data

Materials:

	Steel version	Precious steel version
Main body	A 216 WCC	A 351 CF8M
Body	A 216 WCC	A 351 CF8M
Ball	A 351 CF8M	
Control shaft	AISi 316	
Seat rings	PTFE	
Spring washer	AISi 301	
Thrust ring	AISi 316	
Bearing ring	PTFE with carbon	
Packing ring	Graphit	
Body seal	Graphit	

Table 3 - Materials (WN = Material Number acc. to DIN)

Advantages of the cup spring live-loaded sealing system:

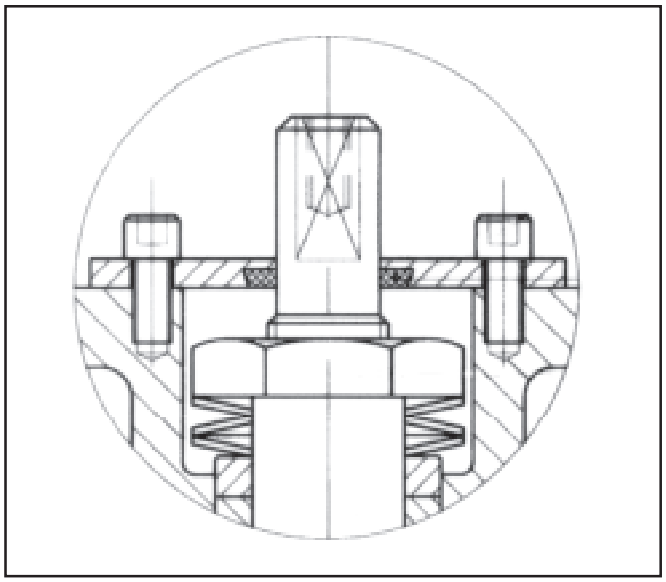

Fig. 3 – Cup spring live-loaded packing

- maintenance-free and self-adjustable,
- highest level of tightness, even under extreme pressure and temperature fluctuations,
- longer service life,
- ***all in all: extremely economic!***

Pressure-Temperature diagram:

The area of application is determined by the pressure-temperature diagram.
Process data and the process medium can affect the values in the diagram.
Operating data exceeding the limit ranges are possible on agreement.

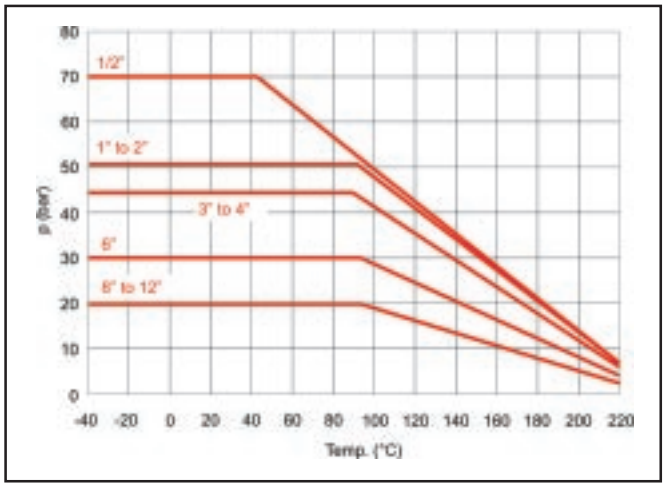

Fig. 4 - Pressure-Temperature diagram

Torque and breakaway torques:

DN	1/2"	3/4"	1"	11/2"	2"	21/2"
ANSI 150	9	11	16	32	48	62
ANSI 300	14	16	19	42	70	90

DN	3"	4"	6"	8"	10"	12"
ANSI 150	103	145	400	720	1100	1650
ANSI 300	150	216	525	1200	1600	1800

Table 4 - Breakaway torque Mdl

The breakaway torques specified are average values which were measured with air at 20°C with the corresponding differential pressures. Operating temperature, process medium and long operating times may affect the permissible torques and breakaway torques considerably.

kv - value:

DN	1/2"	3/4"	1"	1 1/2"	2"	2 1/2"
Kv	20	44	88	200	310	480

DN	3"	4"	6"	8"	10"	12"
Kv	960	1700	4100	8400	13000	20300

Table 5 - kv-value

Dimensions and weights:

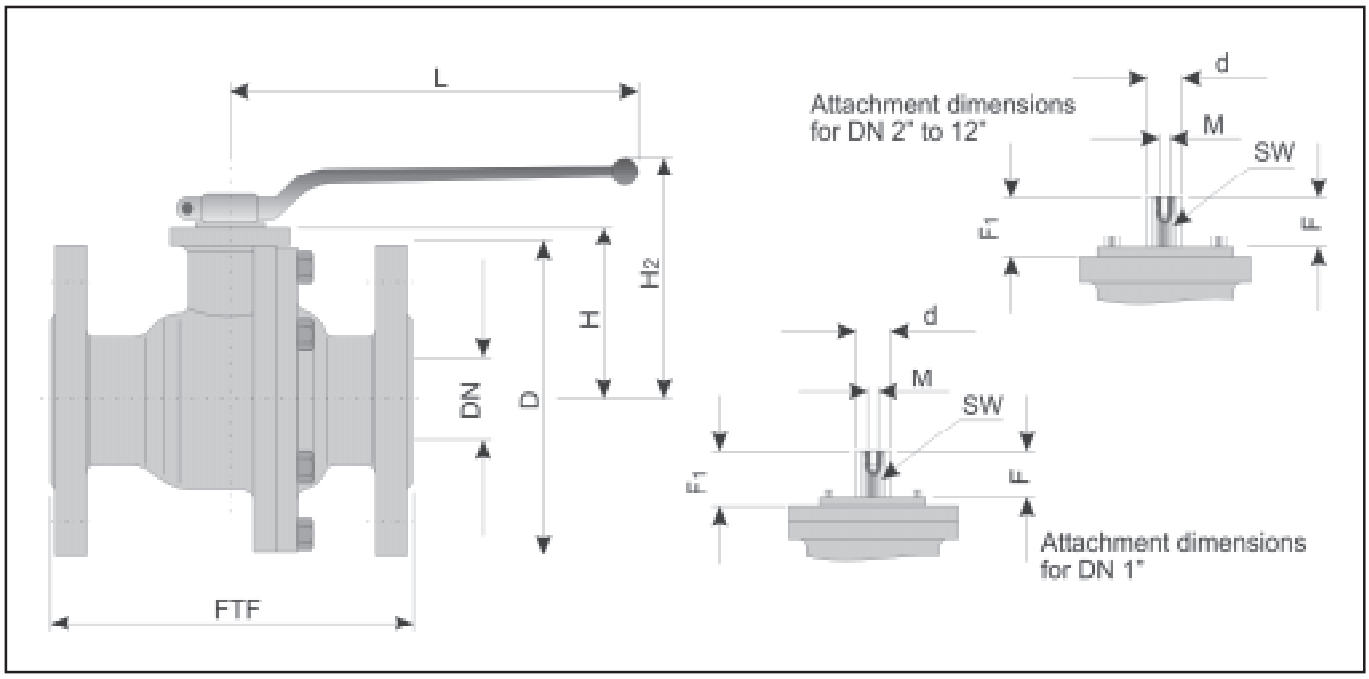

Fig. 5 -Dimensional drawing

DN		1/2"	3/4"	1"	1 1/2"	2"	2 1/2"	3"	4"	6"	8"	10"	12"
ANSI 150 lbs	FTF	108	117	127	165	178	190	203	229	394	457	533	610
	ØD	89	99	108	127	152	178	191	229	279	343	406	483
	weight	2,5	3,3	4,2	7,4	10,6	17	22	32	81	115	240	325
ANSI 300 lbs	FTF	140	152	165	191	216	-	283	305	403	502	568	648
	ØD	95	118	124	156	165	-	210	254	318	381	445	521
	weight	3	4,5	5	10,5	12,5	-	27	44	100	172	284	400
H		52	54	60	75	84	96	114	128	175	245	285	336
H_2		103	105	111	129	138	150	187	201	268	338	-	-
L		185	185	185	300	300	300	355	355	680	750	-	-
Ød		12	12	16	20	20	20	25	25	34	42	42	42
F		13	13	19	22	22	22	24	24	35	40	40	40
F_1		16	16	22	25	25	25	27	27	38	43	43	43
M		M4	M4	M4	M6	M6	M6	M8	M8	M8	M8	M8	M8
SW		8	8	10	14	14	14	19	19	26	32	32	32
DIN ISO Connection		F05	F05	F05	F07	F07	F07	F10	F10	F12	F14	F14	F14

Table 6 - Dimensions in mm and weights in kg

Selection and sizing of the ball valve:

1. Calculation of the required nominal diameter
2. Selection of the valve in accordance with table 2, table 3 and the Pressure-Temperature-diagram
3. Selection of the appropriate actuator
4. Additional equipment

Ordering text:

Ball valve Series 76a,
DN . . . . / PN . . . . , optional special version
Manual gear actuator
or actuator (brand name): . . . .
Supply pressure: . . . . bar
fail-safe position: . . . .
Limit switch (brand name): . . . .
Solenoid valve (brand name): . . . .
Positioner: . . . .
Others: . . . .

For your special requirements please contact our technical sales department.

Pfeiffer Chemie-Armaturenbau GmbH
Hooghe Weg 41 • 47906 Kempen
Telefon: 02152 / 2005-0 • Telefax: 02152 / 1580
E-Mail: vertrieb@pfeiffer-armaturen.com • Internet: www.pfeiffer-armaturen.com

Values subject to change

PDF=030

Pfeiffer
Chemie-Armaturenbau GmbH

Pfeiffer AT - Quarter-Turn Actuator

Series 31a

Type SRP and DAP

Application:

Single- or double-acting piston actuator for control and shut-off valves with rotating flow restrictors, especially with high process demand in chemical plants:

- quarter turn 90°
- air supply to 8 bar
- temperatures -20°C to 80°C

The pneumatic quarter-turn actuators type SRP and DAP are piston actuators for control or OPEN / CLOSED operation. The actuators distinguish themselves by:

- externally adjustable end stops (±4°),
- square position diagonal (Europ. Standard) or parallel,
- freely-adjustable position indicator (in 45° steps),
- assembly and modification without special tools,
- encapsulated spring assembly,
- transmission through involute gearing,
- direction of rotation reversible **without** additional components,
- proven surface refinement by means of Kesternich and salt spray test,
- connection of additional equipment according to VDI/VDE 3845,
- attachments according to DIN/ISO 5211,

Versions:

- **Type SRP**
  Pneumatic quarter-turn actuator, single-acting with spring-return mechanism in the sizes 15 to 5000
- **Type DAP**
  Pneumatic quarter-turn actuator, double-acting without spring-return mechanism in the sizes 15 to 5000

Special designs:

- with emergency manual actuation
- for continuous operation at temperatures from -20° to 150°C through use of Viton O-rings
- for continuous operation at temperatures from -40° to 80°C with silicon seals
- actuators with extended turning range 120° and 180°
- dosage actuator with adjustable central position
- 3-position actuator
- actuator with hydraulic adjustment of rotating speed
- stainless steel AT quarter-turn actuator

Fig. 1 - Pfeiffer AT-Quarter Turn Actuator Series 31a, Type SRP 220

Fig. 2 - Pfeiffer AT-Quarter Turn Actuator Series 31a, Type SRP 5000

Additional equipment and add-on pieces:

For the actuators, the following accessories are available either individually or in combination:
- positioner
- limit switch
- solenoid valves
- air supply stations
- pressure gauge set
- throttling device

Further accessories are available on request for customer specifications. Details on request.

Principle of operation:

The regulating pressure pst generates a force at the piston surface which, in the single-acting version, can be compensated by the springs arranged in the actuator, and in the double-acting version, by an appropriate back pressure. The force generated at the pistons is converted into rotation by means of the pinion shaft. Adjustable end stops for OPEN and CLOSED operation permit a fine setting of the end positions by ±4°.

In the case of the single-acting version, the number of springs determines the spring return torque and the required air supply pressure.

Safety position:
For the actuator type SRP two different directions of rotation are possible, becoming effective by release pressure on the pistons or in the case of air supply failure. The viewing direction is from the actuator to the valve.

Springs rotating to the right
In case of pressure loss, rotation to the right.

Springs rotating to the left
In case of pressure loss, rotation to the left.

The actuator type DAP is designed without springs.
A defined final position is not achieved in the case of air supply failure.

General technical data:

Operation		single-acting	double-acting
max. perm. air supply pressure		8 bar	
sizes		15 • 30 • 60 • 100 • 150 220 • 300 • 450 • 600 • 900 1200 • 2000 • 3000 • 5000	
perm. temperature range		continuous operation -20°C to 80°C	
connection to valve		DIN / ISO 5211	
connection for positioner or signal equipment	Typ 15 to 150	VDI / VDE 3845, size 1	
	Typ 220 to 600	VDI / VDE 3845, size 2	
	Typ 900 to 5000	VDI / VDE 3845, size 4	
connection for solenoid valve		VDI / VDE 3845	

Table 1 – Technical Data

Materials:

body	AlMgSi0,5 F25
cap	GD - AlSi8 .5 Cu3.5 Fe
shaft	ASTM A105
spring-cartridge	ASTM A401
pistons	GD - AlSi8 .5 Cu3.5 Fe

Table 2 - Materials (WN = Material code)

Air drive torque:

Fig. 3 shows the available air drive torque
- MdLE for the single-acting version
- MdLD for the double-acting version

and the available spring drive moment MdF in relation to the angle of rotation.
The course of the operating torque is valid for the correct combination of the respective air supply pressure with the wright number of springs (values in the data sheet underlined and printed bold).

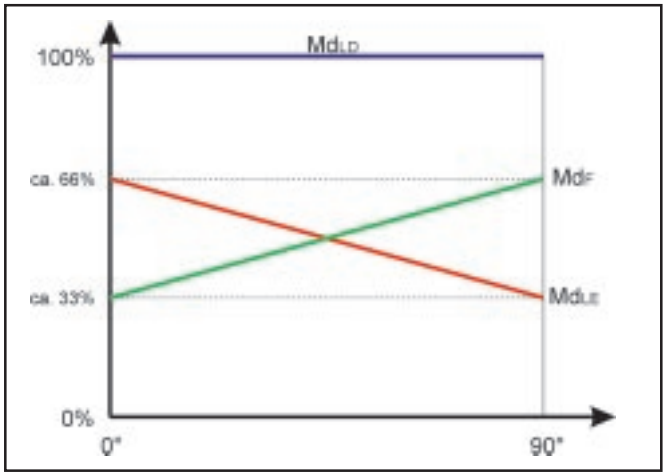

Fig. 3 – Course of operating torque at recommended air inlet pressure

Operating torques:

The operating torques for double- and single-acting actuators are available in the data sheet (DB 31a_EN).

Interesting innovations in this generation of actuators:

The quarter-turn actuators are characterized by a number of technical improvements and interesting innovations, and were developed with an eye on the latest amendments to the ISO 5211.
- **Position of the end caps**
  with security against faulty handling
  The setting of the two end stops is effected at the external stop screws via a cam system (Fig. 4). In order to rule out any risk of injury when unscrewing the stop screws while under pressure, these screws are fitted with special air vent slots. Due to the clearly audible venting of the actuator before completion of unscrewing, the employee is sufficiently warned.
  In order to provide visual proof of the adjustment of the screws, they are coated ex works with a sealing wax.

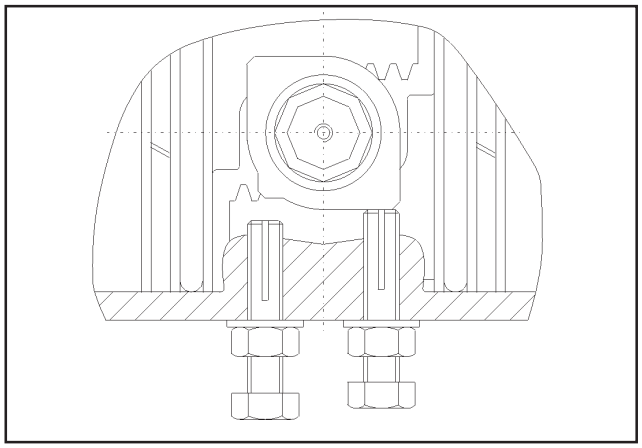

Fig. 4 – Positioning of the end stops

- **Setting of the square end**
  A more flexible installation is achieved through the 45°-step setting of the square in the shaft drive.

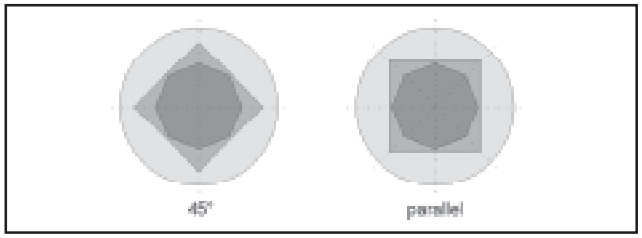

Fig. 5 – Setting of the square

The required settings can be achieved through a rotation of the shaft. In order to obtain the correct display of position, the seat of the position indicator (upper end of shaft) has been octagonally finished, therefore permitting the position indicator also to be mounted in 45°- steps.

- **Multifunctional position indicator**
  The new position indicator may be employed for a 45° or 90° position (Fig. 6). An optical display is realized by means of inserts in the position indicator. These may be variably installed.

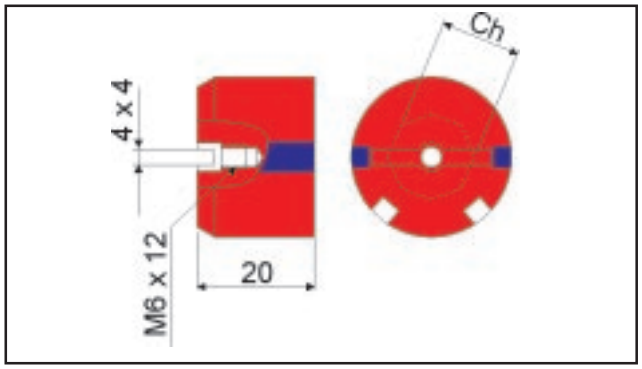

Fig. 6 – Position indicator

The position indicator has a VDI/VDE – interface. This permits practically all standard accessories to be mounted without difficulty.

- **Direct assembly**
  By exchanging the standard inserts by metal inserts, the multifunctional position indicator can be quickly and simply prepared for the direct attachment of special limit switches.

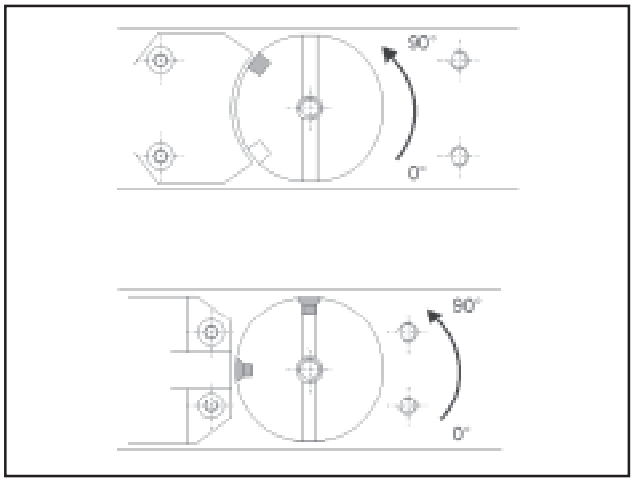

Fig. 7 – Multifunctional position indicator

- **Technical details**

The tooth profile and therefore the force transmission of the toothed rack - shaft principle were consequently optimised by employing involute gearing.

A further technical measure is the strengthening of the shaft diameter and bearing shells. This permits an even greater force absorption by the newly developed body.

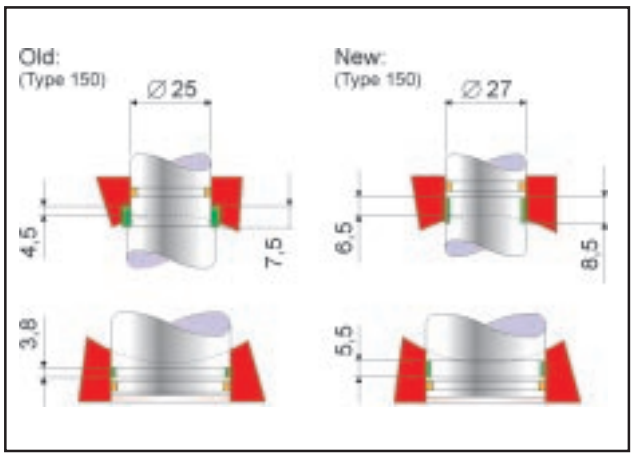

Fig. 8 - Bearing

Dimensions and weights

The dimensions and weights for the actuators type SRP and DAP are available in the data sheet (DB 31a_EN).

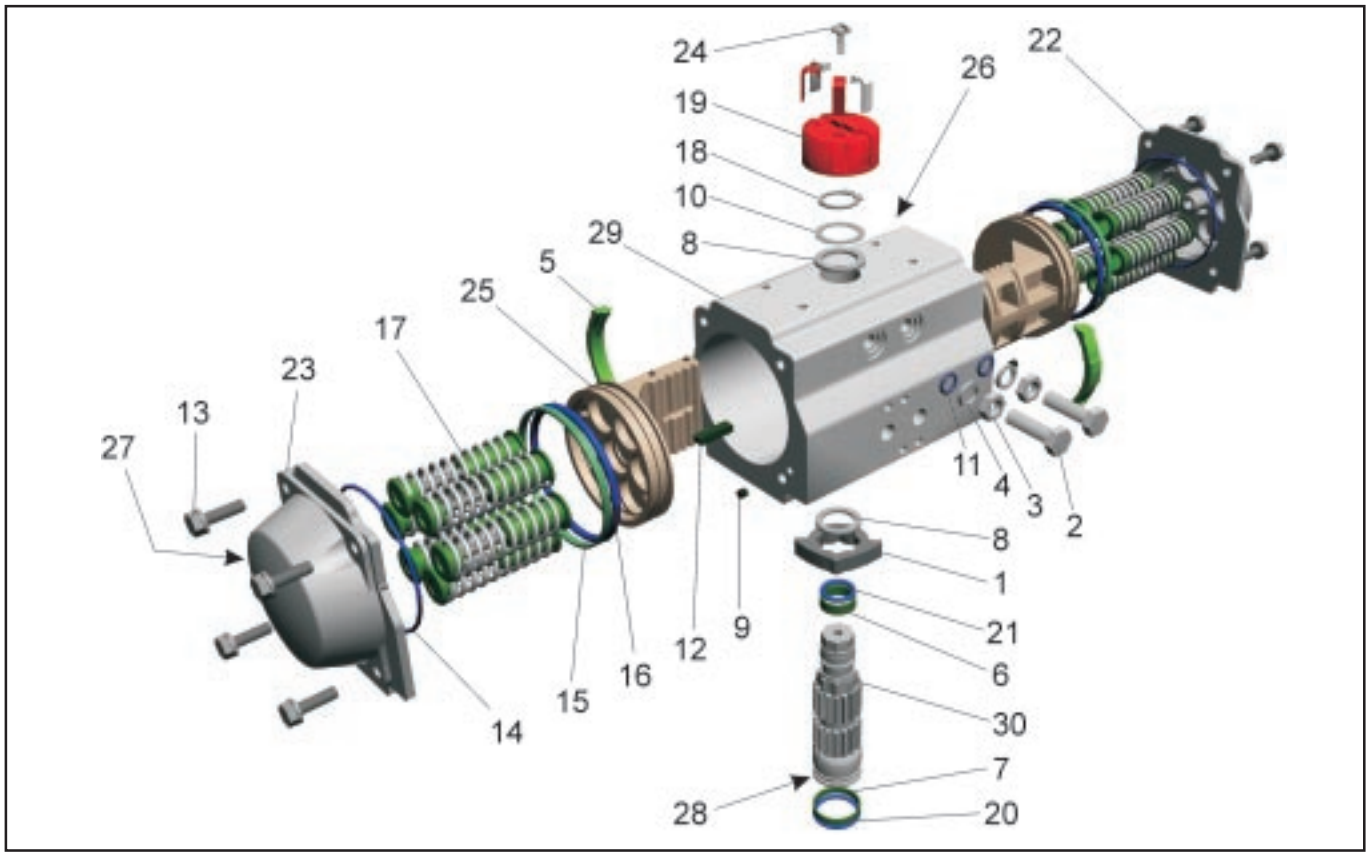

Fig. 9 – Cross-sectional drawing

Pos.	Description	Pos.	Description
1	Octi-cam (Stop arrangement)	16	O-ring
2	End stop screw	17	Spring cartridge
3	Nut	18	Spring clip
4	Washer	19	Position indicator
5	Bearing (Piston back)	20	O-ring
6	Bearing (Pinion top)	21	O-ring
7	Bearing (Pinion bottom)	22	Right end cap
8	Thrust bearing	23	Left end cap
9	Plug	24	Cap screw (Indicator)
10	Thrust washer	25	Pistons
11	O-ring	26	Identification label
12	Piston guide	27	Identification label (Cap)
13	Cap screw	28	Centering
14	O-ring	29	Body
15	Bearing (Piston head)	30	Shaft

Table 3 – Parts List

Required data for your order:

Actuator type:	Series 31a Type DAP or SRP
Size:	15, 30, 60, 100, 150, 220, 300, 450, 600, 900, 1200 2000, 3000 oder 5000
Number of springs:	only for single-acting type SRP
Safety position:	springs left- or right-rotating (only for single-acting type SRP)
Air supply:	.... bar
Operative range:	number of springs or nominal signal range
VDI/VDE bracket:	for connection of positioner or signal equipment

For your special requirements please contact our technical sales department

Pfeiffer Chemie-Armaturenbau GmbH

Hooghe Weg 41 • 47906 Kempen
Telefon: 02152 / 2005-0 • Telefax: 02152 / 1580
E-Mail: vertrieb@pfeiffer-armaturen.com • Internet: www.pfeiffer-armaturen.com

Specifications subject to change without notice

600440 / PDF=156

Pfeiffer
Chemie-Armaturenbau GmbH

Pfeiffer AT - Quarter-Turn Actuator Series 31a

Operating torques for double- and single-acting actuators (Type DAP and SRP)

Type	Spring no.	Air-torque (Nm) at 2,5 to 4,2 bar										Springtor.	
		2,5 bar		3 bar		3,5 bar		4 bar		4,2 bar		Start	End
		0°	90°	0°	90°	0°	90°	0°	90°	0°	90°	90°	0°
DAP 6	-	3		3,6		4,2		4,8		5,1		-	
DAP 15	-	8,3		10		11,6		13,3		14		-	
SRP 15	2/3	**4,9**	**3,4**	6,6	5,1	8,3	6,8	9,9	8,4	10,6	9,1	4,9	3,4
	3	4,3	2,5	**5,9**	**4,1**	7,6	5,8	9,3	7,4	9,9	8,1	5,8	4
	3/4			5,3	3,1	**6,9**	**4,8**	8,6	6,5	9,2	7,1	6,8	4,7
	4					6,2	3,8	**7,9**	**5,5**	**8,6**	**6,2**	7,8	5,4
	4/5							7,2	4,5	7,9	5,2	8,8	6,1
DAP 30	-	14,7		18		20,5		23,5		25		-	
SRP 30	2/3	**9,1**	**6,2**	12	9,2	15	12,1	17,9	15	19,1	16,2	8,4	5,5
	3	8	4,5	**10,9**	**7,5**	13,9	10,4	16,8	13,3	18	14,5	10,1	7
	3/4			9,8	5,8	**12,8**	**8,7**	15,7	11,6	16,9	12,8	11,8	7,8
	4					11,6	7	**14,6**	**10**	**15,7**	**11,1**	13,5	8,9
	4/5							13,5	8,3	14,6	9,4	15,2	10
DAP 60	-	29,1		35		40,7		46,5		49		-	
SRP 60	2/3	**18**	**11,8**	23,8	17,6	29,7	23,4	35,5	29,2	37,8	31,6	17,3	11,1
	3	15,8	8,3	**21,6**	**14,1**	27,5	19,9	33,3	25,8	35,6	28,1	20,8	13
	3/4			19,4	10,7	**25,2**	**16,5**	31,1	22,3	33,4	24,6	24,2	15,5
	4					23	13	**28,8**	**18,8**	**31,2**	**21,2**	27,7	17,7
	4/5							26,6	15,4	29	17,7	31,2	19,9
DAP 100	-	46		55		64		73		77		-	
SRP 100	2/3	**27,4**	**16,9**	36,6	26	45,7	35,2	54,9	44,3	58,5	48	28,9	18,3
	3	23,8	11,1	**32,9**	**20,3**	42,1	29,4	51,2	38,6	54,9	42,2	34,7	22
	3/4			29,2	14,5	**38,4**	**23,6**	47,5	32,8	51,2	36,4	40,4	25,7
	4					34,7	17,9	**43,9**	**27**	**47,5**	**30,7**	46,2	29,3
	4/5							40,2	21,2	43,9	24,9	52	33
DAP 150	-	66,5		80		93,1		106		112		-	
SRP 150	2/3	**41,1**	**27,1**	54,4	40,4	67,7	53,7	81	67	86,3	72,3	39,4	25,3
	3	36,1	19,2	**49,4**	**32,5**	62,7	45,8	76	59,1	81,3	64,4	47,3	30
	3/4			44,3	24,6	**57,6**	**37,9**	70,9	51,2	76,2	56,5	55,1	35,5
	4					52,5	30	**65,8**	**43,3**	**71,1**	**48,7**	63	40,5
	4/5							60,8	35,5	66,1	40,8	70,9	45,6
DAP 220	-	107		129		150		172		181		-	
SRP 220	2/3	**66,5**	**41,9**	87,9	63,4	109,4	84,9	131	106,4	140	115	65,5	41
	3	58,3	28,8	**79,7**	**50,3**	101,2	71,8	123	93,3	131	101,9	78,6	49,2
	3/4			71,5	37,2	**93**	**58,7**	115	80,2	123	88,8	91,7	57,4
	4					84,8	45,6	**106**	**67,1**	**115**	**75,7**	105	65,6
	4/5							98	54	107	62,6	118	73,8
DAP 300	-	138		166		194		222		233		-	
SRP 300	2/3	**86**	**56**	114	84	141	111	169	139	180	150	82	53
	3	75	40	**103**	**67**	131	95	159	123	170	134	99	63
	3/4			93	51	**120**	**79**	148	106	159	117	115	74
	4					110	62	**138**	**90**	**149**	**101**	132	84
	4/5							127	73	138	84	148	95
DAP 450	-	217		261		304		348		365		-	
SRP 450	2/3	**135**	**89**	179	132	222	176	265	219	283	236	129	82
	3	119	63	**162**	**106**	206	150	249	193	266	211	155	99
	3/4			146	80	**189**	**124**	233	167	250	185	180	115
	4					173	98	**216**	**142**	**233**	**159**	206	132
	4/5							200	116	217	133	232	148
DAP 600	-	284		340		397		454		477		-	
SRP 600	2/3	**171**	**118**	228	174	285	231	342	288	364	310	166	112
	3	149	84	**206**	**141**	262	198	319	255	342	277	199	135
	3/4			183	108	**240**	**165**	297	221	319	244	233	157
	4					218	131	**274**	**188**	**297**	**211**	266	180
	4/5							252	155	275	178	299	202
DAP 900	-	383		459		536		613		643		-	
SRP 900	2/3	**225**	**146**	301	223	378	299	455	376	485	406	237	158
	3	193	99	**270**	**175**	346	252	423	329	454	359	284	190
	3/4			238	128	**315**	**205**	391	281	422	312	332	221
	4					283	157	**360**	**234**	**390**	**264**	379	253
	4/5							328	186	359	217	426	285
DAP1200	-	532		638		745		851		893		-	
SRP1200	2/3	**319**	**217**	426	323	532	430	638	536	681	578	315	213
	3	277	154	**383**	**260**	489	367	596	473	638	515	378	255
	3/4			341	197	**447**	**304**	553	410	596	453	441	298
	4					404	241	**511**	**347**	**553**	**390**	504	340
	4/5							468	284	511	327	567	383
DAP2000	-	893		1072		1251		1430		1501		-	
SRP2000	2/3	**533**	**372**	712	551	890	730	1069	908	1141	980	521	360
	3	461	268	**640**	**447**	818	625	997	804	1068	876	625	433
	3/4			568	343	**746**	**521**	925	700	996	771	730	505
	4					674	417	**853**	**596**	**924**	**667**	834	577
	4/5							781	491	852	563	938	649
DAP3000	-	1297		1556		1815		2075		2179		-	
SRP3000	2/3	**751**	**496**	1011	755	1270	1015	1529	1274	1633	1378	801	546
	3	642	336	**902**	**595**	1161	854	1420	1114	1524	1217	961	655
	3/4			792	435	**1052**	**694**	1311	954	1415	1057	1121	764
	4					943	534	**1202**	**793**	**1306**	**897**	1281	873
	4/5							1093	633	1197	737	1442	982
DAP5000	-	2252		2703		3153		3604		3784		-	
SRP5000	2/3	**1332**	**1014**	1783	1465	2233	1915	2684	2365	2864	2546	1238	920
	3	1149	767	**1599**	**1217**	2049	1667	2500	2118	2680	2298	1486	1104
	3/4			1415	969	**1865**	**1420**	2316	1870	2496	2050	1733	1288
	4					1682	1172	**2132**	**1623**	**2312**	**1803**	1981	1472
	4/5							1948	1375	2128	1555	2229	1656

Spring no.	Air-torque (Nm) at 4,2 to 8 bar												Springtor.	
	4,2 bar		4,5 bar		5 bar		5,5 bar		6 bar		8 bar		Start	End
	0°	90°	0°	90°	0°	90°	0°	90°	0°	90°	0°	90°	90°	0°
-	5,1		5,4		6,1		6,7		7,3		9,7		-	
-	14		15		16,6		18,3		19,9		26,6		-	
4	**8,6**	**6,2**	9,6	7,2	11,2	8,8	12,9	10,5	14,6	12,1			7,8	5,4
4/5	7,9	5,2	**8,9**	**6,2**	10,6	7,8	12,2	9,5	13,9	11,2	20,5	17,8	8,8	6,1
5			8,2	5,2	**9,9**	**6,9**	11,5	8,5	13,2	10,2	19,8	16,8	9,7	6,7
5/6					9,2	5,9	**10,9**	**7,6**	12,5	9,2	19,2	15,9	10,7	7,4
6							10,2	6,6	**11,9**	**8,2**	**18,5**	**14,9**	11,7	8,1
-	25		26		29,3		32		35,2		46,9		-	
4	**15,7**	**11,1**	17,5	12,9	20,4	15,8	23,4	18,7	26,3	21,7			13,5	8,9
4/5	14,6	9,4	**16,4**	**11,2**	19,3	14,1	22,3	17,1	25,2	20	36,9	31,7	15,2	10
5			15,3	9,5	**18,2**	**12,4**	21,1	15,4	24,1	18,3	35,8	30	16,9	11,1
5/6					17,1	10,8	**20**	**13,7**	23	16,6	34,7	28,3	18,6	12,2
6							18,9	12	**21,9**	**14,9**	**33,6**	**26,7**	20,2	13,3
-	49		52		58,2		64		69,8		93,1		-	
4	**31,2**	**21,2**	34,7	24,7	40,5	30,5	46,3	36,3	52,1	42,1			27,7	17,7
4/5	29	17,7	**32,5**	**21,2**	38,3	27	44,1	32,8	49,9	38,6	73,2	61,9	31,2	19,9
5			30,2	17,7	**36,1**	**23,6**	41,9	29,4	47,7	35,2	71	58,5	34,6	22,1
5/6					33,8	20,1	**39,7**	**25,9**	45,5	31,7	68,7	55	38,1	24,3
6							37,5	22,4	**43,3**	**28,3**	**66,5**	**51,5**	41,5	26,5
-	77		82		92		101		110		146		-	
4	**47,5**	**30,7**	53	36,2	62,2	45,3	71,3	54,5	80,5	63,6			46,2	29,3
4/5	43,9	24,9	**49,4**	**30,4**	58,5	39,5	67,7	48,7	76,8	57,8	113,4	94,5	52	33
5			45,7	24,6	**54,8**	**33,8**	64	42,9	73,1	52,1	109,8	88,7	57,8	36,7
5/6					51,2	28	**60,3**	**37,1**	69,5	46,3	106,1	82,9	63,5	40,3
6							56,7	31,4	**65,8**	**40,5**	**102,4**	**77,1**	69,3	44
-	112		120		133		146		160		213		-	
4	**71,1**	**48,7**	79,1	56,6	92,4	69,9	105,7	83,2	119	96,5			63	40,5
4/5	66,1	40,8	**74**	**48,8**	87,3	62,1	100,6	75,3	113,9	88,6	167,1	141,8	70,9	45,6
5			69	40,9	**82,3**	**54,2**	95,6	67,5	108,9	80,8	162	133,9	78,8	50,7
5/6					77,2	46,3	**90,5**	**59,6**	103,8	72,9	157	126,1	86,7	55,7
6							85,4	51,7	**98,7**	**65**	**151,9**	**118,2**	94,5	60,8
-	181		193		215		236		258		344		-	
4	**115**	**75,7**	128	88,6	149	110,1	171	131,6	192	153,1			105	65,6
4/5	107	62,6	**120**	**75,5**	141	97	163	118,5	184	140	270,1	225,9	118	73,8
5			111	62,4	**133**	**83,9**	154	105,4	176	126,9	261,9	212,8	131	82
5/6					125	70,8	**146**	**92,3**	168	113,8	253,7	199,7	144	90,2
6							138	79,2	**159**	**100,7**	**245,5**	**186,6**	157	98,4
-	233		249		277		305		332		443		-	
4	**149**	**101**	165	117	193	145	221	173	248	201			132	84
4/5	138	84	**155**	**101**	182	129	210	156	238	184	349	295	148	95
5			144	84	**172**	**112**	200	140	227	168	338	278	165	105
5/6					161	96	**189**	**123**	217	151	328	262	181	116
6							179	107	**206**	**135**	**317**	**245**	198	126
-	365		391		435		478		522		696		-	
4	**233**	**159**	260	185	303	229	347	272	390	316			206	132
4/5	217	133	**243**	**159**	287	203	330	246	374	290	547	464	232	148
5			227	134	**270**	**177**	314	221	357	264	531	438	258	165
5/6					254	151	**297**	**195**	341	238	515	412	283	181
6							281	169	**324**	**213**	**498**	**386**	309	198
-	477		511		567		624		681		908		-	
4	**297**	**211**	331	245	388	302	444	358	501	415			266	180
4/5	275	178	**309**	**212**	365	268	422	325	479	382	706	609	299	202
5			286	178	**343**	**235**	400	292	456	349	683	575	332	224
5/6					320	202	**377**	**259**	434	315	661	542	365	247
6							355	225	**411**	**282**	**638**	**509**	399	269
-	643		689		766		842		919		1225		-	
4	**390**	**264**	436	310	513	387	589	464	666	540			379	253
4/5	359	217	**405**	**263**	481	340	558	416	634	493	941	799	426	285
5			373	216	**450**	**292**	526	369	603	445	909	752	474	316
5/6					418	245	**495**	**321**	571	398	877	704	521	348
6							463	274	**540**	**351**	**846**	**657**	568	379
-	893		957		1064		1170		1276		1702		-	
4	**553**	**390**	617	453	723	560	830	666	936	772			504	340
4/5	511	327	**575**	**390**	681	497	787	603	894	709	1319	1135	567	383
5			532	327	**638**	**434**	745	540	851	646	1277	1072	630	425
5/6					596	371	**702**	**477**	809	583	1234	1009	693	468
6							660	414	**766**	**520**	**1192**	**946**	756	510
-	1501		1608		1787		1966		2144		2859		-	
4	**924**	**667**	1032	774	1210	953	1389	1132	1568	1310			834	577
4/5	852	563	**959**	**670**	1138	849	1317	1028	1495	1206	2210	1921	938	649
5			887	566	**1066**	**745**	1245	923	1423	1102	2138	1817	1042	721
5/6					994	640	**1173**	**819**	1351	998	2066	1713	1146	793
6							1101	715	**1279**	**894**	**1994**	**1608**	1251	865
-	2179		2334		2594		2853		3112		4150		-	
4	**1306**	**897**	1461	1053	1721	1312	1980	1571	2239	1831			1281	873
4/5	1197	737	**1352**	**893**	1612	1152	1871	1411	2130	1671	3168	2708	1442	982
5			1243	732	**1503**	**992**	1762	1251	2021	1510	3059	2548	1602	1091
5/6					1393	832	**1653**	**1091**	1912	1350	2950	2388	1762	1200
6							1544	931	**1803**	**1190**	**2840**	**2228**	1922	1309
-	3784		4054		4504		4955		5405				-	
4	**2312**	**1803**	2582	2073	3033	2524	3483	2974	3934	3424			1981	1472
4/5	2128	1555	**2398**	**1825**	2849	2276	3299	2726	3750	3177			2229	1656
5			2215	1578	**2665**	**2028**	3115	2479	3566	2929			2476	1839
5/6					2481	1781	**2931**	**2231**	3382	2682			2724	2023
6							2748	1983	**3198**	**2734**			2971	2207

Table 1 - Operating torques

The recommended design is underlined and printed bold

Pfeiffer AT-Actuator
Series 31a

Dimensions:

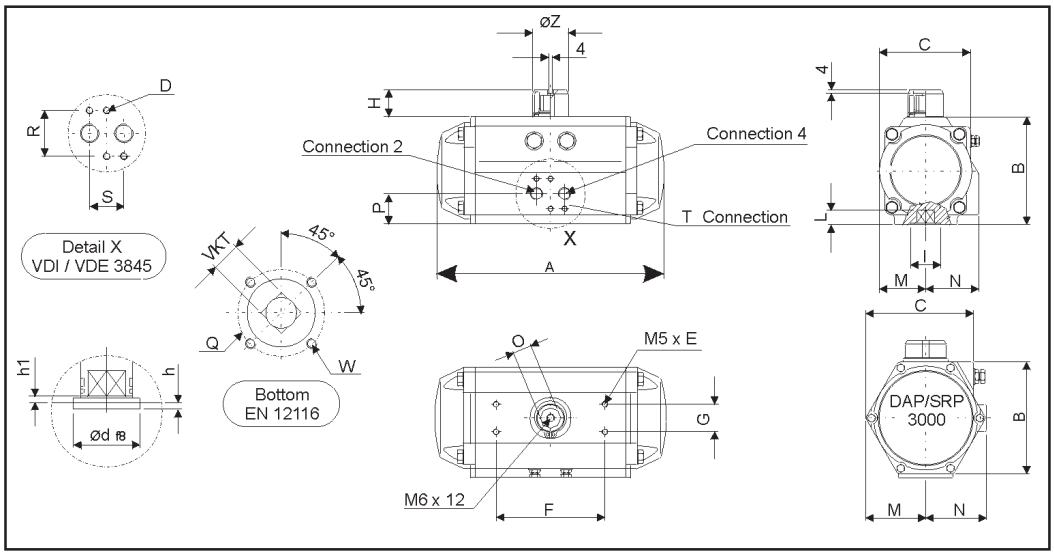

Technical data:

- max. pressure:
  8 bar
- control medium:
  filtered, dry compressed air, non-corrosive medium
- temperature range:
  248K (-25°C) to 353K (80°C), higher temperatures on request
- angle of rotation:
  90° (± 4°) adjustable in both directions

Type	DAP/SRP **15**	DAP/SRP **30**	DAP/SRP **60**	DAP/SRP **100**	DAP/SRP **150**	DAP/SRP **220**	DAP/SRP **300**	DAP/SRP **450**	DAP/SRP **600**	DAP/SRP **900**	DAP/SRP **1200**	DAP/SRP **2000**	DAP/SRP **3000**	DAP/SRP **5000**
ISO 5211	F04	F05	F05	F07	F07	F10	F10	F12	F12	F14	F14	F16	F16	F25
VKT	11	14	14	17	17	22	22	27	27	36	36	46	46	55
T-ISO 228	1/8"	1/8"	1/8"	1/8"	1/4"	1/4"	1/4"	1/4"	1/4"	1/4"	1/4"	3/8"	1/2"	1/2"
A	140,5	158,5	210,5	247,5	268,5	315	345	408,5	437,5	487	543	621	684	876
B	69	85	102	115	127	145	157	177	196	220,5	245	298,5	330	410
C	59	72	84,5	97,5	111	127	136	156,5	169	190,7	213	251	298,5	383
D	M5 x 8	M5 x 8	M5 x 8	M5 x 8	M5 x 8	M5 x 8	M5 x 8	M5 x 8	M5 x 8	M5 x 8	M5 x 8	M6 x 10	M6 x 10	M6 x 10
E	4	8	8	8	8	8	8	8	8	8	8	8	8	8
F	80	80	80	80	80	80	80	80	80	130	130	130	130	130
G	30	30	30	30	30	30	30	30	30	30	30	30	30	30
H	20	20	20	20	20	30	30	30	30	50	50	50	50	50
I	30	35	35	55	55	70	70	85	85	100	100	130	130	200
L	12	16	16	19	19	24	24	29	29	38	38	48	48	57
M	29	36	42,5	49,5	56	64	69,5	80	88	99	110	131	163,5	204
N	41,5	47	52	56,8	67	77	82	91,5	99	105	112	131	166	214
O	11	11	19	19	19	27	27	27	27	42	42	42	42	42
P	26,5	30	30,5	32,5	37,5	42,5	45	47	52	58	62	78,5	165	185
Q	42	50	50	70	70	102	102	125	125	140	140	165	165	254
R	32	32	32	32	32	32	32	32	32	32	32	45	45	45
S	24	24	24	24	24	24	24	24	24	24	24	40	40	40
W	M5	M6	M6	M8	M8	M10	M10	M12	M12	M16	M16	M20	M20	8 x M16
Ø d f8	30	35	35	55	55	70	70	85	85	100	100	130	130	200
h max.	2	3	3	3	3	3	3	3	3	4	4	5	5	5
h min.	0,5	0,5	1,5	1,5	1,5	1,5	1,5	1,5	1,5	2	2	2,5	2,5	2,5
Ø z	40	40	40	40	40	56/65	56/65	65	65	80/115	80/115	115	115	115

Table 2 - Dimensions in mm

For your special requirements please contact our technical sales department

Pfeiffer Chemie-Armaturenbau GmbH

Hooghe Weg 41 • 47906 Kempen
Telefon: 02152 / 2005-0 • Telefax: 02152 / 1580
E-Mail: vertrieb@pfeiffer-armaturen.com • Internet: www.pfeiffer-armaturen.com

Specifications subject to change without notice

600441 / PDF=157

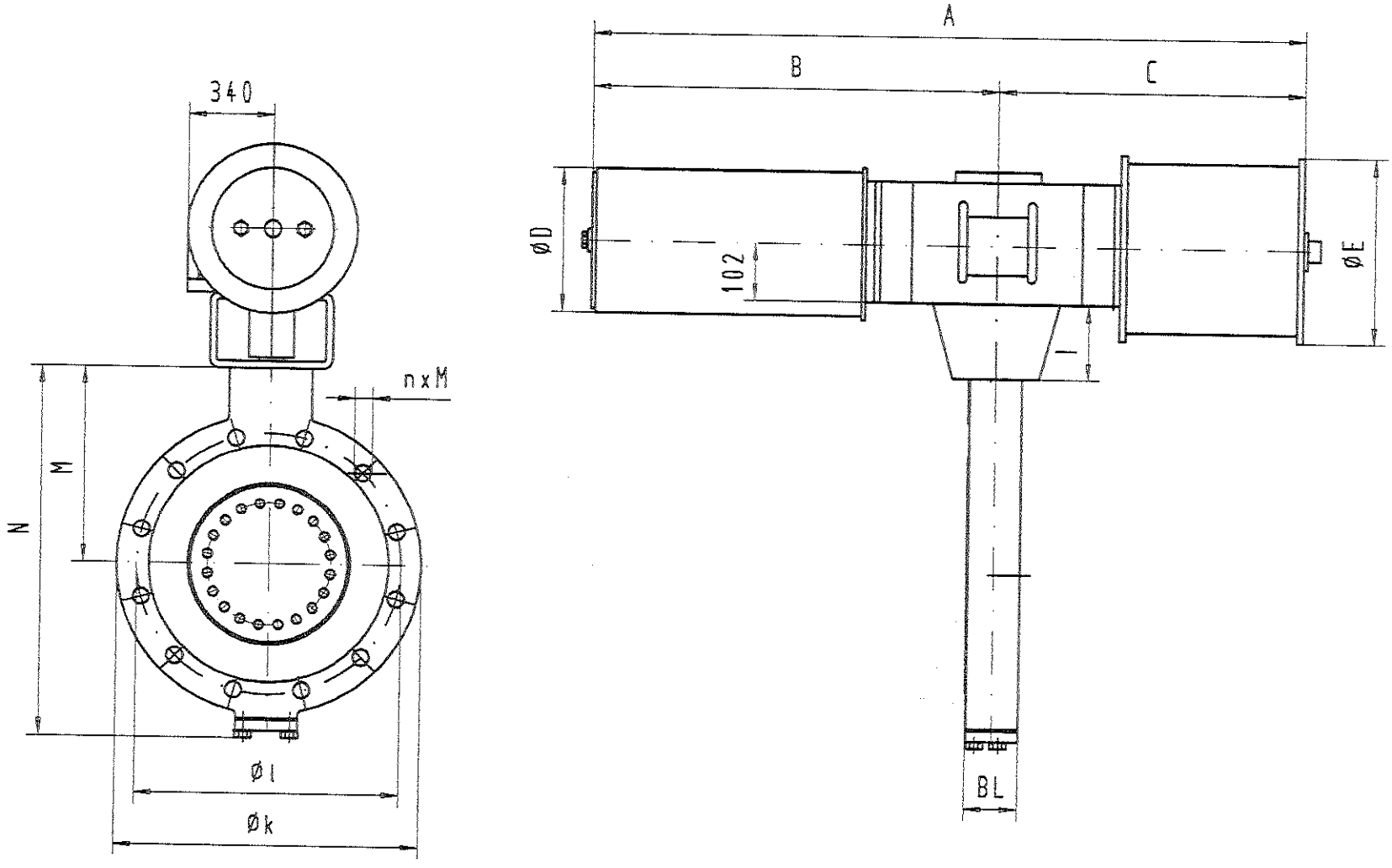

DN	nxM	A	B	C	ØD	ØE	H	I	BL	Øk	Øl	M	N	Gewicht
20"	20x11/4"UNC	2715	1685	1030	410	680	278,9	150	127	699	635	430	915	1260kg

Tag-No
UV400202A/UV400202B

P F E I F F E R
CHEMIE-ARMATURENBAU
G M B H

Klappe BR14t 150lbs
mit Rotork GP-130-585A/C4 Antrieb

Lenzen 08 10 2004
18680
Maßstab %
Änderung vorbehalten

Butterfly Valve
Type 14t

MODELL / MODEL A1 (ANFLANSCH / LUG TYP API 609 T.2)
ABMESSUNGEN UND GEWICHTE / DIMENSIONS AND WEIGHT 3" – 36" / ANSI 150 + ANSI 300
FREIES WELLENENDE / BARE SHAFT

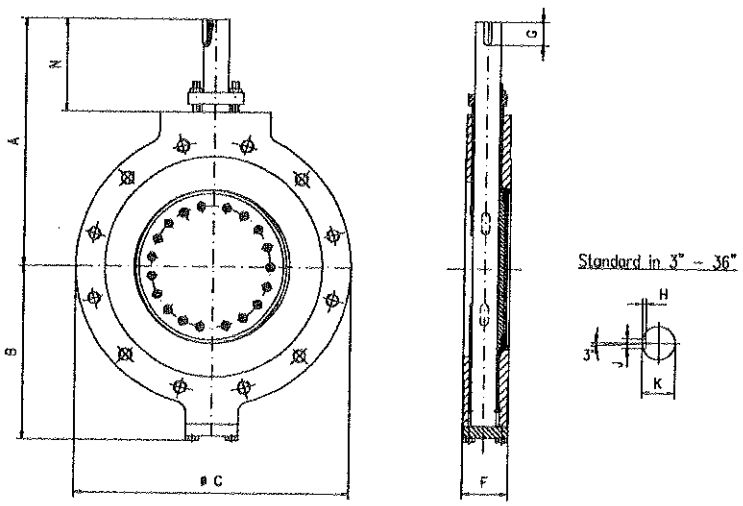

Abmessungen / Dimensions in mm

DN Size	80 3"	100 4"	150 6"	200 8"	250 10"	300 12"	350 14"	400 16"	450 18"	500 20"	600 24"	700 28"	750 30"	800 32"	900 36"
A	225	240	282	368	408	432	527	578	628	670	742	899	961	961	993
B	135	151	186	213	246	300	332	393	445	477	553	634	712	712	729
C (ANSI150)	190	240	295	343	405	482	530	597	635	700	810	927	985	1061	1169
C (ANSI300)	210	240	318	380	445	520	585	648	710	775	915	1035	1093	1150	1270
F (ANSI150)	48	54	57	64	71	81	92	102	114	127	154	165	190	190	203
F (ANSI300)	48	54	59	73	83	92	117	133	149	159	181	*	*	*	*
G	25	25	32	40	40	45	80	80	80	90	90	120	120	120	120
H	3,5	3,5	5	5	5	5,5	6	7	7,5	7,5	9	10	10	10	10
J	6	6	10	10	12	14	16	18	20	20	25	28	28	28	28
K	20	22	32	38	40	45	55	65	70	75	90	110	110	110	110
N	105	105	112	160	160	165	230	230	230	240	240	320	320	320	320

* = Abmaße nach Vereinbarung mit Kunden / Dimensions per customer specification

Gewichte / Weight in kg

DN Size	80 3"	100 4"	150 6"	200 8"	250 10"	300 12"	350 14"	400 16"	450 18"	500 20"	600 24"	700 28"	750 30"	800 32"	900 36"
ANSI150	15	19	30	45	64	95	140	200	253	327	630	1280	**	**	**
ANSI300	16	27	40	56	84	122	200	285	377	470	720	**	**	**	**

** = in Abhängigkeit von der Spezifikation / in accordance to specification

Zwick Armaturen GmbH · Egerstraße 25 · D-58256 Ennepetal · Germany ·Tel.: +49 (0)2333 / 9856-50 · Fax: +49 (0)2333 / 9856-60
E-Mail: info@zwick-gmbh.de · Internet: www.zwick-gmbh.de

Pneumatic Control and Shut-off Butterfly Valve

Type LTR 43

LEUSCH

SAMSON

Application

Tight-closing, triple eccentric high-pressure butterfly valve for process engineering and plants with industrial requirements

Nominal size **3″ to 80″ · DN 80 to 2000**
Nominal pressure **ANSI Class 150 to 2500 · PN 10 to 400**
Temperatures **–196 to 1000 °C**

Triple eccentric Type LTR 43 Control and Shut-off Butterfly Valve with zero leakage designed for bi-directional service at full differential pressure.

Valve body material
- Carbon steel
- Stainless steel
- Special materials

Valve styles
- Wafer
- Lug type (valve for dead-end service)
- Double flange
- Welding ends

Seat ring material
- 316 stainless steel/graphite laminated seal
- 316 stainless steel stellited
- Filled PTFE
- Special materials

The butterfly valves can be equipped with various actuators, positioners, solenoid valves as well as other accessories.

Versions

Standard version

– **Type LTR 43** · Wafer-style butterfly valve conforming to API 609 and DIN specifications

Other versions

– Lug type body conforming to API 609 and DIN specifications
– Double flanged valve body according to BS 5155/ISO 5752 specifications
– Face-to-dimensions according to ANSI B 16.10 and DIN
– Fire-safe design conforming to BS 6755 Part 2, API 607 and API 6FA
– Cryogenic version down to –196 °C
– High-temperature version up to +1000 °C
– Alternative materials for valve body and internal parts: Duplex, bronze, Monel, Incoloy, Hastelloy B and C, titanium and zirconium

Fig. 1 · Type LTR 43 High-pressure Butterfly Valve in double flange version, size 10″, ANSI Class 1500 with pneumatic actuator and positioner

Fig. 2 · Tight-closing Type LTR 43 Butterfly Valve, lug type, metal sealing with manual gear

---

Principle of operation

The process medium can flow through the butterfly valve in both directions. The valve flow coefficient depends on the opening angle of the disc and the area released between the disc and valve body.

The valve is sealed by a metal/graphite laminated seal stack (seat) inserted in between the body and the metal disc edge (LTR 43-1) or by the metal seat ring screwed onto the disc (LTR 43-2). The seat adapts itself to the disc or seat ring. The friction forces are minimized by the triple eccentric design of the disc and shaft.

Fail-safe position

Pneumatic rotary actuators have two fail-safe positions which become effective when the actuator is relieved of pressure as well as when the supply air fails:

Valve CLOSED without supply air
The butterfly valve closes when the supply air fails.

Valve OPEN without supply air
The butterfly valve opens when the supply air fails.

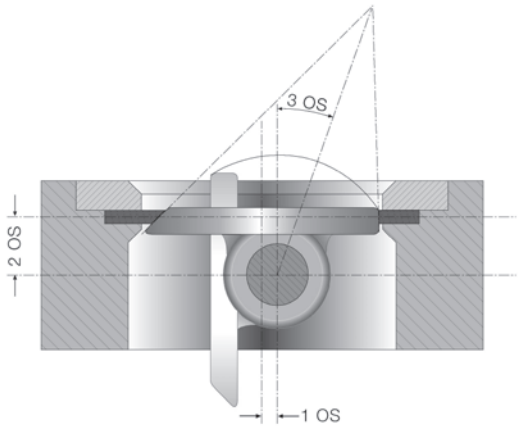

Fig. 3 · Disc geometry of Type LTR 43

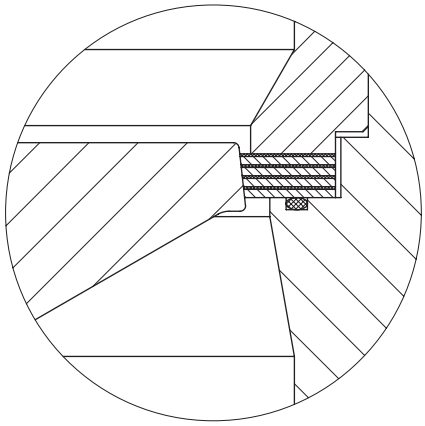

Fig. 4 · Type LTR with solid disc

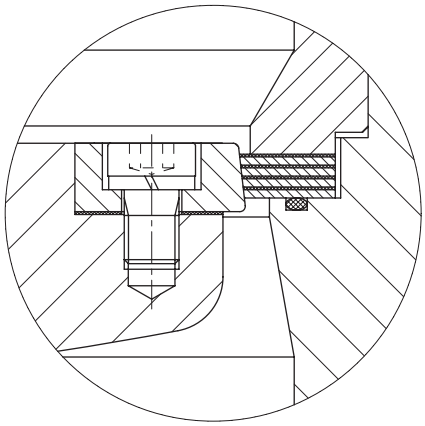

Fig. 5 · Type LTR with seat ring screwed onto the disc

Table 1 · Technical data

Nominal size	3"to 80" · DN 80 to DN 2000		
Nominal pressure	ANSI Class 150 to 2500 · PN 10 to 420		
Body style	Wafer · Lug type · Double flange		
Face-to-face dimensions	According to API, ANSI or DIN		
Seat	Metal/graphite laminated seal	Stellited	PTFE
Characteristics			
Opening angle max.	80° (90°)		
Rangeability	>50 : 1		
Permissible operating pressures	See pressure-temperature diagram		
Temperature range	–196 to 1000 °C	–196 to 1000 °C	–196 to 220 °C
Leakage acc. to DIN EN 12266-1	Test P12, leakage rate "A"		

Table 2 • Materials

Version	ANSI	DIN
Body	ASTM A 216 WCB · A 351 CF8M	1.0619 · 1.4408
Disc	ASTM A 216 WCB · A 351 CF8M	
Shaft	17-4PH	
Seat ring (for LTR 43-2 see Fig. 5)	316 SS · 316 SS with hard facing	
Seat	Metal/graphite laminated seal · Stellited · PTFE	
Bonnet and clamp ring	Carbon steel or 316 SS	
Packing gland	316 SS	
Bearing (two-piece)	Bronze · 316 SS with hard facing · Stellite	
Packing	Graphite · PTFE	

Table 3 • K_V values • Determining of C_V value: $C_V = K_V \cdot 1.17$
Table 3a • Type LTR 43 for ANSI 150 / PN 25

Nominal size		ANSI 150 / PN 25							
		Opening angle							
in	mm	10°	20°	30°	40°	50°	60°	70°	80°
3″	80	13	29	46	69	103	157	193	223
4″	100	20	43	67	102	150	228	308	356
6″	150	48	103	160	243	360	551	741	860
8″	200	85	183	284	434	641	979	1321	1530
10″	250	135	292	452	691	1022	1568	2100	2427
12″	300	197	424	657	1005	1488	2280	3058	3534
14″	350	265	572	887	1356	2005	3069	4124	4770
16″	400	352	760	1180	1803	2669	4085	5486	6341
18″	450	458	987	1537	2348	3478	5349	7177	8295
20″	500	555	1195	1853	2832	4192	6422	8617	9961
24″	600	810	1747	2708	4139	6126	9386	12593	14559
28″	700	1099	2369	3674	5614	8309	12730	17082	19741
32″	800	1449	3125	4845	7403	10957	16787	22525	26035
36″	900	1848	3981	6170	9429	13956	21375	28685	33155
40″	1000	2275	4902	7605	11619	17195	25175	35345	40850
48″	1200	3278	7068	10963	17148	24790	36043	50963	58900

Table 3b • Type LTR 43 for ANSI 300 / PN 50

Nominal size		ANSI 300 / PN 50							
		Opening angle							
in	mm	10°	20°	30°	40°	50°	60°	70°	80°
3″	80	12	27	43	64	96	146	179	208
4″	100	19	40	62	95	140	212	286	331
6″	150	45	96	149	226	335	512	689	800
8″	200	79	170	264	404	596	910	1229	1422
10″	250	126	272	420	643	950	1458	1953	2257
12″	300	183	394	611	935	1384	2120	2844	3287
14″	350	246	532	825	1261	1865	2854	3835	4436

Nominal size		ANSI 300 / PN 50							
		Opening angle							
in	mm	10°	20°	30°	40°	50°	60°	70°	80°
16″	400	327	707	1097	1677	2482	3799	5102	5897
18″	450	426	918	1429	2184	3235	4975	6675	7715
20″	500	516	1111	1723	2634	3899	5972	8014	9264
24″	600	753	1625	2518	3849	5697	8729	11711	13540
28″	700	1022	2203	3417	5221	7727	11839	15886	18359
32″	800	1348	2906	4506	6885	10190	15612	20948	24212
36″	900	1719	3702	5738	8769	12979	19879	26677	30834
40″	1000	2116	4559	7073	10806	15991	23413	32871	37991
48″	1200	3049	6573	10196	15948	23055	33520	47396	54777

Table 3c • Type LTR 43 for ANSI 600 / PN 100

Nominal size		ANSI 600 / PN 100							
		Opening angle							
in	mm	10°	20°	30°	40°	50°	60°	70°	80°
3″	80	11	23	37	56	83	127	156	181
4″	100	16	35	54	83	122	185	249	289
6″	150	39	83	130	197	292	446	600	696
8″	200	69	148	230	352	519	793	1070	1239
10″	250	109	237	366	560	828	1270	1701	1966
12″	300	160	343	532	814	1205	1847	2477	2863
14″	350	215	463	718	1098	1624	2486	3340	3864
16″	400	285	616	956	1460	2162	3309	4444	5136
18″	450	371	799	1245	1902	2817	4333	5813	6719
20″	500	450	968	1501	2294	3396	5202	6980	8068
24″	600	656	1415	2793	3353	4962	7603	10200	11793

Table 3d • Type LTR 43 for ANSI 900 / PN 160

Nominal size		ANSI 900 / PN 160							
		Opening angle							
in	mm	10°	20°	30°	40°	50°	60°	70°	80°
3″	80	8	19	29	44	66	100	124	143
4″	100	13	28	43	65	96	146	197	228
6″	150	31	66	102	156	230	353	474	550
8″	200	54	117	182	278	410	627	845	979
10″	250	86	187	289	442	654	1004	1344	1553
12″	300	126	271	420	643	952	1459	1957	2262
14″	350	170	366	568	868	1283	1964	2639	3053
16″	400	225	486	755	1154	1708	2614	3511	4058
18″	450	293	632	984	1503	2226	3423	4593	5309
20″	500	355	765	1186	1812	2683	4110	5515	6375
24″	600	518	1118	1733	2649	3921	6007	8060	9318

Table 4a • Terms for control valve sizing

Opening angle	30°	40°	50°	60°	70°	80°	90°
F_L	0.75	0.74	0.65	0.65	0.60	0.55	0.55
x_T	0.50	0.40	0.35	0.35	0.30	0.25	0.25

Table 4b • x_{Fz} values

Opening angle	30°	40°	50°	60°	70°	80°	90°
x_{Fz}	0.30	0.27	0.25	0.20	0.15	0.12	0.10

Table 4c • Pressure and temperature ranges for valve body made of 1.4408 • Pressures in bar

ANSI	Temperature in °C																			
	0... 20	30	40	50	60	70	80	90	100	120	140	160	180	200	250	300	350	400	450	500
Cl. 150	20	20	20	20	20	20	20	20	20	20	19	19	18	18	17	16	16	15	15	15
Cl. 300	50	49	48	47	46	45	44	43	42	41	40	38	37	36	35	33	32	31	30	30
Cl. 600	100	97	95	93	91	89	87	85	83	81	79	77	75	73	70	67	65	63	62	61
Data apply to ANSI Class 900 to 2500, others materials and temperatures over 500 °C available on request.																				

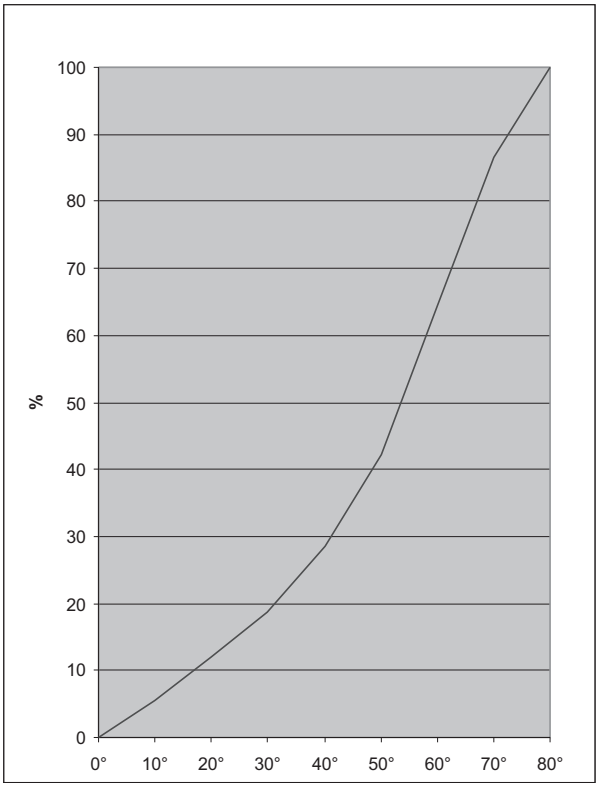

Fig. 6 · Flow characteristics

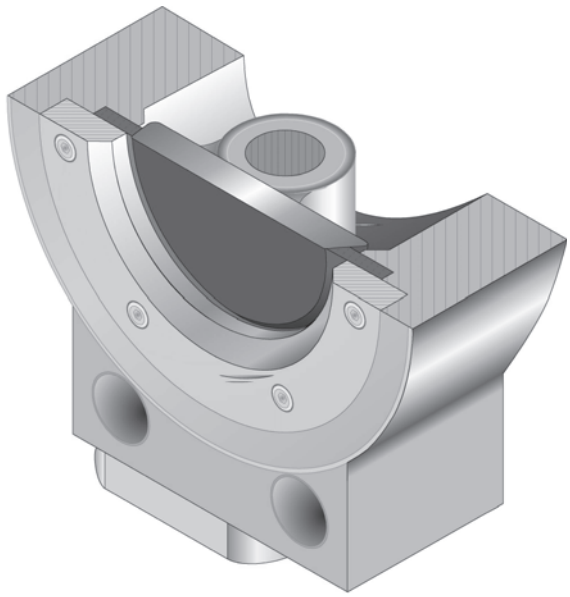

Fig. 7 · Disc with hard-faced seat ring

Table 5 • Torques in Nm

Nominal size		Δp in bar			
in	mm	10	20	50	100
3″	80	70	80	115	215
4″	100	105	125	210	385
6″	150	240	300	525	990
8″	200	450	570	1040	2225
10″	250	735	950	1990	3830
12″	300	1050	1370	3125	7100
14″	350	1575	2150	4600	9670
16″	400	2150	3000	6950	15450
18″	450	2800	4000	8750	21900
20″	500	3750	5500	13000	31500
24″	600	5200	8000	20750	53830
30″	750	9500	14450	44000	110000
32″	800	10810	16470	50420	126000
36″	900	14500	22700	63750	173500
40″	1000	18100	28100	78750	214300

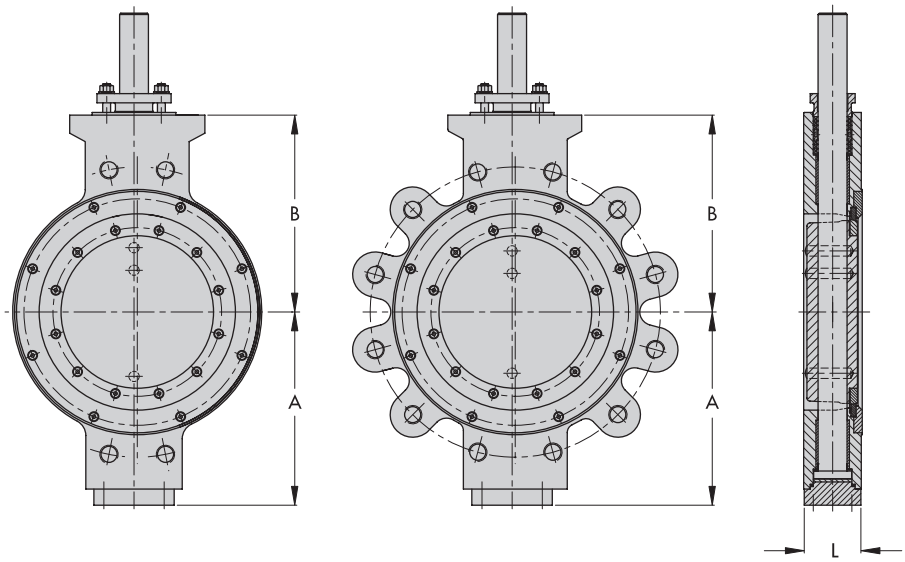

Fig. 8 · Dimensional diagrams for wafer style body and lug type body

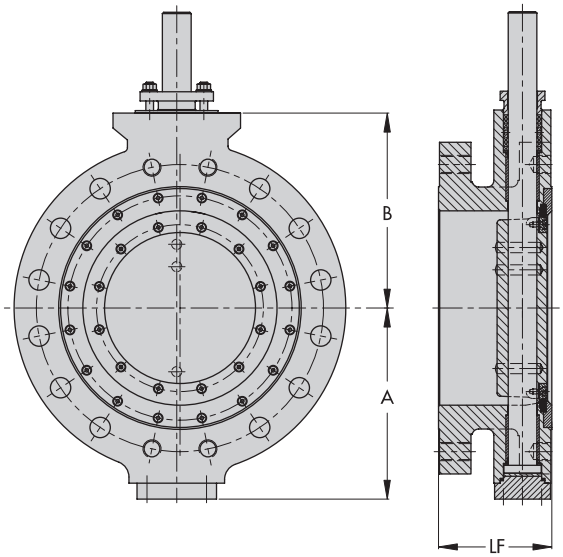

Fig. 9 · Dimensional diagram for double-flanged body

Table 6 · Dimensions in mm for Type LTR 43

Nominal size	in	3″	4″	6″	8″	10″	12″	14″	16″	18″	20″	24″	28″	30″	32″	36″	40″	48″
	mm	80	100	150	200	250	300	350	400	450	500	600	700	750	800	900	1000	1200
ANSI Class 150 / PN 25																		
A	mm	120	150	190	220	250	290	320	350	375	415	450	515	580	590	640	700	800
B	mm	125	160	200	235	265	305	330	360	400	450	480	535	610	620	670	730	840
L	mm	48	54	57	64	71	81	92	102	114	127	154	165	165	190	200	216	276
LF	mm	114	127	140	152	165	178	190	216	222	229	267	292	318	318	330	410	480
ANSI Class 300 / PN 50																		
A	mm	125	160	200	235	260	300	325	365	400	450	520	580	600	630	700	720	820
B	mm	135	165	210	240	270	310	335	370	410	460	540	610	630	660	730	740	860
L	mm	48	54	59	73	83	92	117	133	149	159	181	209	241	241	260	300	320
LF	mm	114	127	140	152	165	178	190	216	222	229	267	292	318	318	330	410	470
ANSI Class 600 / PN 100																		
A	mm	130	175	225	265	310	335	375	410	440	485	550	580	620	660	720	On request	
B	mm	135	180	235	275	320	340	385	420	450	490	610	640	670	700	740		
L	mm	54	64	78	102	117	140	155	178	200	216	232	292	318	318	330		
LF	mm	180	190	210	230	250	270	290	310	330	350	390	450	480	510	540		
ANSI Class 900 / PN 160																		
A	mm	135	215	265	300	350	380	395	425	460	500	590	Larger valve sizes on request					
B	mm	140	225	280	310	375	400	415	440	480	530	630						
L	mm	64	80	104	112	135	170	190	202	230	252	312						
LF	mm	210	235	250	310	350	380	400	430	460	490	530						
ANSI Class 1500 / PN 250																		
A	mm	310	360	390	430	480	490	540	650	Larger valve sizes as well as ANSI Class 2500 on request								
B	mm	320	385	430	470	510	530	580	680									
L	mm	130	160	190	220	260	300	330	385									
LF	mm	420	460	500	570	610	660	710	790									

Options

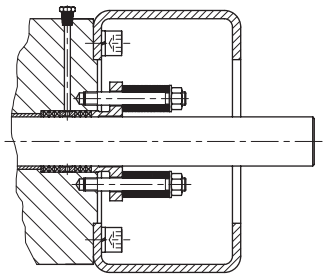

Fig. 10 · *TA-Luft* packing

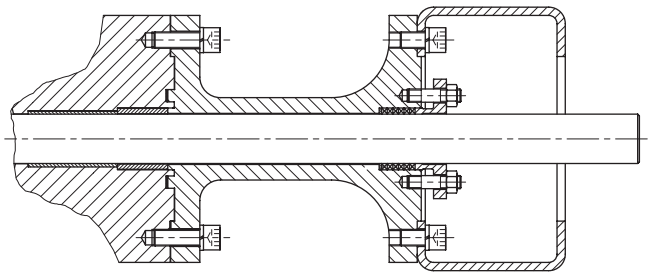

Fig. 11 · Extension for cryogenic or high temperature applications

Ordering text and valve specifications

Butterfly Valve Type	LTR 43-1	–	W	–	1 2 1	–	1 1 1	–	DN ...	–	PN ...
Specification->	1		2		3 4 5		6 7 8		9		10

1 Valve type
- LTR 43-1 Solid disc
- LTR 43-2 Seat ring screwed onto the disc

2 Valve body style
- W Wafer
- L Lug type for dead-end service
- F Double flange

3 Body material
- 1 A 216 WCB / 1.0619*
- 2 A 351 CF8M / 1.4408*

4 Disc material
- 1 A 216 WCB / 1.0619 (seat ring for LTR 43-2 in 1.4541)*
- 2 A 351 CF8M / 1.4408*

5 Seat material
- 1 Metal/graphite laminated seal
- 2 Stellited
- 3 PTFE

6 Shaft material
- 1 17-4PH*
- 2 1.4571*
- 3 1.4571 hard chromed*
- 4 1.4571 stellited*

7 Shaft bearing
- 1 Bronze
- 2 316 SS with hard facing
- 3 Stellite

8 Packing
- 1 Graphite
- 2 PTFE
- 3 Graphite/graphite (live-loaded with purge port)
- 4 PTFE/PTFE (live-loaded with purge port)

9 Nominal size
- DN …

10 Nominal pressure
- Mating flange, PN …

Actuator	Single- or double-acting
Fail-safe position (single-acting only)	Valve OPEN or valve CLOSED
Supply air	… bar
Pressure drop	… bar
Temperature	… °C
Accessories	Positioner, limit switch, solenoid valve

* or equivalent material

Specifications subject to change without notice.

SAMSON AG · MESS- UND REGELTECHNIK
Weismüllerstraße 3 · 60314 Frankfurt am Main · Germany
Phone +49 69 4009-0 · Fax +49 69 4009-1507
Internet: http://www.samson.de

Butterfly Valve
VSS - metal seated

Si-203 GB

Edition: 1999-09

Nominal pressure	-	**PN 10-25**
Nominal size	-	**DN 80-1200**
Material	-	**Stainless steel**

Somas Butterfly Valve type VSS:

- **Control- and shut-off valve.**
- **For applications up to 550°C** (1020°F)
- **To be mounted between flanges, alt. with lugs.**
- **Tightness class V according to IEC 534-4V as standard.**
- **Solid seat made of stainless steel.**

Somas butterfly valve VSS is used as a control-, on/off- and manually operated valve. The VSS is designed to handle a wide range of liquids, gases and steam within a broad range of temperatures.

The disc geometry, as well as the seat shape, are unique and make together a very good tightness.

The valve is of double-eccentric design and the unique shape of the disc allows the use of a solid stainless steel seat.

The solid seat is unaffected by high flow velocities and a good valve function is achieved even on difficult applications. The seat is replaceable in alternative materials.

The VSS valve is designed to be mounted between flanges, but can also be supplied in lugged design.

The valves are delivered ready for installation and operation as tested units complete with our pneumatic actuators, positioners and other accessories.

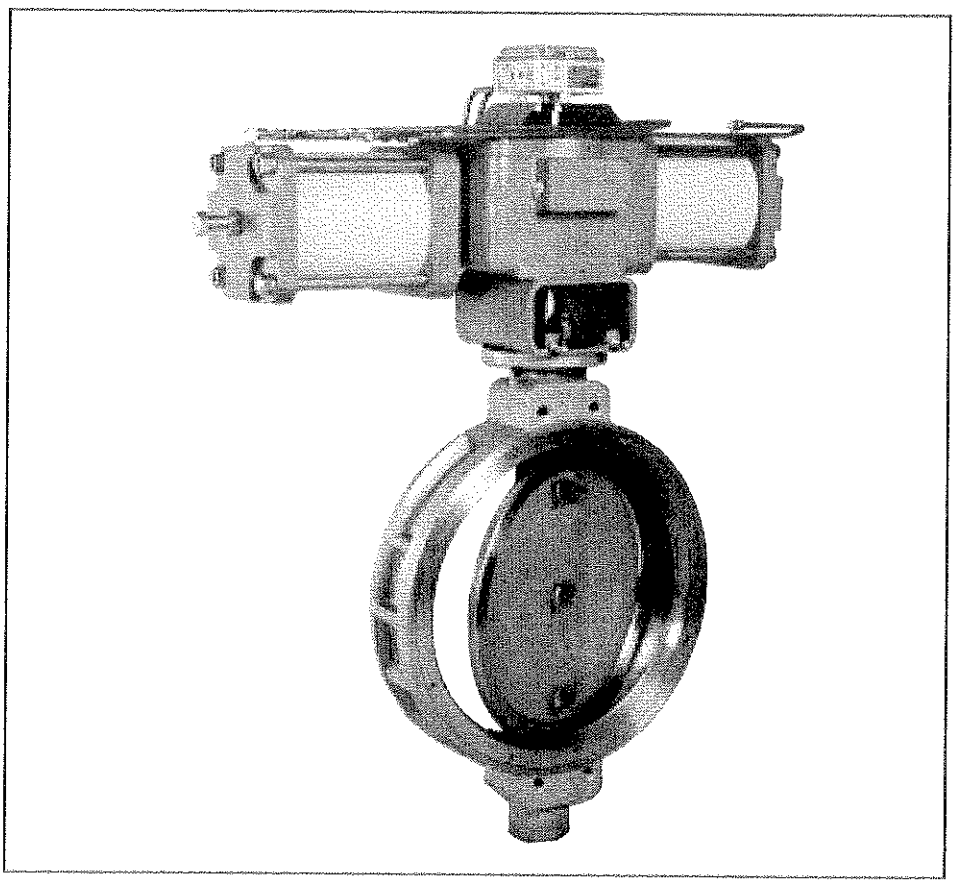

Tightness class

According to IEC 534-4 V. (PTFE-seat = class VI)

Factor F_{LP}

Factor	Opening angle 10°	20°	30°	40°	50°	60°	70°	80°	90°
F_{LP}	0.88	0.86	0.81	0.78	0.71	0.63	0.53	0.50	0.52

Flow characteristics

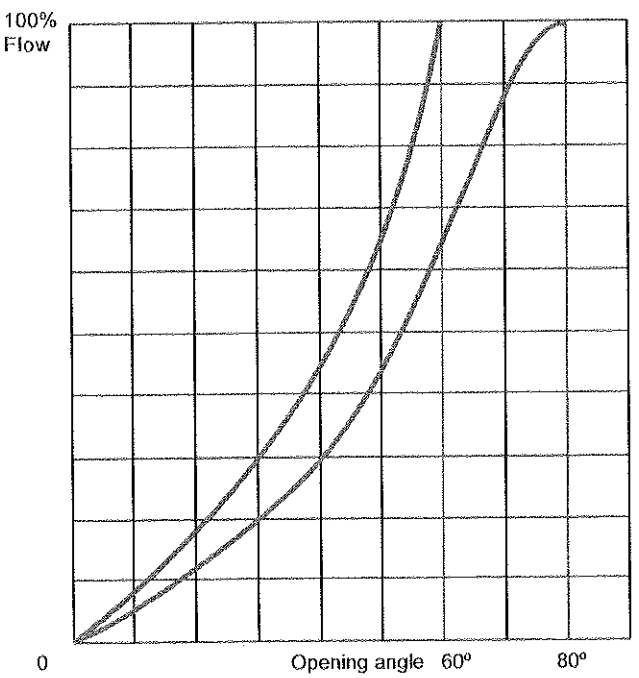

Liquid pressure recovery factor F_L

Factor	Opening angle 10°	20°	30°	40°	50°	60°	70°	80°	90°
F_L	0.88	0.86	0.82	0.80	0.74	0.68	0.61	0.60	0.59

Factor F_L is valid for all valve sizes

Pipe geometry factor F_P

Valve DN	Pipe DN	Opening angle 10°	20°	30°	40°	50°	60°	70°	80°	90°
	100				0.99	0.99	0.96	0.93	0.91	0.93
80	150	1.0	1.0	0.99	0.98	0.97	0.92	0.86	0.83	0.86
	200				0.97	0.94	0.88	0.81	0.77	0.81
	150				0.98	0.97	0.93	0.88	0.84	0.88
100	200	1.0	1.0	0.99	0.97	0.94	0.87	0.80	0.76	0.80
	250				0.96	0.93	0.85	0.77	0.72	0.77
	150				0.98	0.95	0.91	0.91	0.88	0.91
125	200	1.0	1.0	0.99	0.95	0.89	0.85	0.83	0.79	0.83
	250				0.93	0.86	0.78	0.78	0.74	0.78
	200				0.98	0.95	0.91	0.91	0.88	0.91
150	250	1.0	1.0	0.99	0.95	0.89	0.83	0.83	0.79	0.83
	300				0.93	0.86	0.78	0.78	0.74	0.78
	250				0.99	0.98	0.96	0.93	0.91	0.93
200	300	1.0	1.0	0.99	0.98	0.96	0.92	0.86	0.83	0.86
	350				0.97	0.94	0.88	0.81	0.77	0.81
	300				0.99	0.99	0.97	0.95	0.93	0.95
250	350	1.0	1.0	0.99	0.99	0.97	0.93	0.88	0.85	0.88
	400				0.98	0.95	0.90	0.83	0.80	0.83
	350				0.99	0.99	0.98	0.96	0.95	0.96
300	400	1.0	1.0	0.99	0.99	0.98	0.94	0.90	0.87	0.90
	500				0.98	0.96	0.91	0.85	0.82	0.85
	400				0.99	0.99	0.98	0.96	0.95	0.96
350	450	1.0	1.0	0.99	0.99	0.98	0.94	0.90	0.87	0.90
	500				0.98	0.96	0.91	0.85	0.82	0.85
	450				0.99	0.99	0.99	0.97	0.97	0.97
400	500	1.0	1.0	0.99	0.99	0.98	0.96	0.93	0.91	0.93
	600				0.98	0.96	0.91	0.85	0.82	0.85
	500				0.99	0.99	0.99	0.98	0.97	0.98
450	600	1.0	1.0	0.99	0.99	0.97	0.94	0.90	0.87	0.90
	700				0.98	0.95	0.90	0.84	0.80	0.84
	600				0.99	0.99	0.97	0.95	0.93	0.95
500	700	1.0	1.0	0.99	0.98	0.97	0.93	0.88	0.85	0.88
	800				0.98	0.95	0.89	0.83	0.79	0.83
	700				0.99	0.99	0.98	0.96	0.95	0.96
600	800	1.0	1.0	0.99	0.99	0.97	0.94	0.90	0.87	0.90
	900				0.98	0.96	0.91	0.85	0.81	0.85
	800				0.99	0.99	0.98	0.97	0.96	0.96
700	900	1.0	1.0	0.99	0.99	0.98	0.95	0.91	0.89	0.91
	1000				0.98	0.96	0.92	0.87	0.83	0.87
	800				0.99	0.99	0.98	0.97	0.96	0.96
750	900	1.0	1.0	0.99	0.99	0.98	0.95	0.91	0.89	0.91
	1000				0.98	0.96	0.92	0.87	0.83	0.87
	900				0.99	0.99	0.98	0.97	0.96	0.97
800	1000	1.0	1.0	0.99	0.99	0.98	0.94	0.93	0.90	0.93
	1200				0.98	0.96	0.91	0.85	0.81	0.84
	1000				0.99	0.99	0.98	0.97	0.96	0.97
900	1200	1.0	1.0	0.99	0.99	0.98	0.95	0.91	0.87	0.91
	1400				0.98	0.96	0.91	0.84	0.80	0.84
	1200				0.99	0.99	0.97	0.95	0.93	0.95
1000	1400	1.0	1.0	0.99	0.98	0.97	0.93	0.88	0.85	0.88
	1600				0.98	0.95	0.89	0.83	0.79	0.83
	1400				0.99	0.99	0.98	0.96	0.95	0.96
1200	1600	1.0	1.0	0.99	0.98	0.98	0.95	0.91	0.88	0.91
	1800				0.98	0.96	0.91	0.85	0.82	0.85

Capacity factor K_V and Resistance factor ζ

DN	Opening angle 10°	20°	30°	40°	50°	60°	70°	80°	90°	ζ80°
80	14	31	48	73	108	165	203	235	205	1.18
100	21	45	70	107	158	240	324	375	326	1.13
125	35	75	116	177	262	400	520	605	523	1.06
150	50	108	168	256	379	580	780	905	784	0.98
200	89	193	299	457	675	1030	1390	1610	1397	0.99
250	142	307	476	727	1076	1650	2211	2555	2222	0.95
300	207	446	692	1058	1566	2400	3219	3720	3235	0.93
350	279	602	934	1427	2111	3230	4341	5021	4362	0.95
400	371	800	1242	1898	2809	4300	5775	6675	5805	0.91
450	482	1039	1618	2472	3661	5630	7555	8732	7594	0.90
500	584	1258	1951	2981	4413	6760	9071	10485	9117	0.90
600	853	1839	2851	4357	6448	9880	13256	15325	13223	0.76
700	1157	2494	3867	5909	8746	13400	17981	20780	18071	0.77
750	1157	2494	3867	5909	8746	13400	17981	20780	18071	0.77
800	1525	3289	5100	7793	11534	17670	23711	27405	23830	0.76
900	1945	4190	6495	9925	14690	22500	30195	34900	30345	0.80
1000	2395	5160	8005	12230	18100	26500	37205	43000	37390	0.81
1200	3450	7440	11540	18050	26095	37940	53645	62000	53910	0.81

Relation between K_V och C_V : $K_V = 0.86\ C_V$

Pressure-/temperature ratings

PN	Working temperature °C 0-20	30	40	50	60	70	80	90	100	120	140	160	180	200	250	300	350	400	450	500	550
6	6	5.7	5.7	5.4	5.4	5.1	5.1	5.1	4.8	4.8	4.5	4.5	4.5	4.2	4.2	6.5	6.5	3.6	3.6	3.6	3.6
10	10	9.5	9.5	9	9	8.5	8.5	8.5	8	8	7.5	7.5	7.5	7	7	6.5	6.5	6	6	6	6
16	16	15.5	15	14.5	14.5	14	13.5	13.5	13	12.5	12.5	12	12	11.5	11	10.5	10	10	9.5	9.5	9.5
25	25	24.5	24	23	22.5	22	21.5	21	20.5	20	19.5	19	18.5	18	17.5	16.5	16	15.5	15.5	15	15

Use shaft material according to material code A for temperatures up to 150°C.
Use shaft material according to material code B for acids and hot gases above 150°C.

Max allowable pressure drops valid at 20°C

DN	PN	Max pressure drop, bar at opening angle 0°	60°	80°	Torque Min. at Dp bar	Nm	Torque Min. at Dp bar	Nm	Torque Max. Shaft Nm
80	25	25	13	4.4	≤ 10	100	> 10	120	220
100	25	25	13	4.4	≤ 10	120	> 10	165	220
125	25	25	15	5.8	≤ 10	180	> 10	220	220
150	25	25	9	2.7	≤ 10	200	> 10	250	350
200	25	25	4.3	1.1	≤ 10	250	> 10	290	350
250	25	25	3.6	1.05	≤ 10	400	> 10	500	620
300	25	25	3.6	0.93	≤ 10	500	> 10	620	975
350	25	20	3.6	1.09	≤ 8	800	> 8	1000	1500
400	25	20	4.7	1.43	≤ 8	1000	> 8	1350	2800
450	25	16	3.4	0.95	≤ 7	1350	> 7	1900	2800
500	25	15	4.4	1.19	≤ 6	1900	> 6	2700	5000
600	25	10	3.9	1.13	≤ 5	2400	> 5	2900	8000
700	25	8	2.7	0.75	≤ 4	3200	> 4	4200	8000
750	25	8	2.7	0.75	≤ 4	3200	> 4	4200	8000
800	25	8	2.6	0.75	≤ 4	4000	> 4	5000	12000
900	10	7	2.4	0.65	≤ 3	4800	> 3	5800	12000
1000	10	6	2.2	0.55	≤ 3	6000	> 3	7500	12000
1200	6-10	4.5	1.8	0.45	≤ 3	7500	> 3	9000	22000

VSS

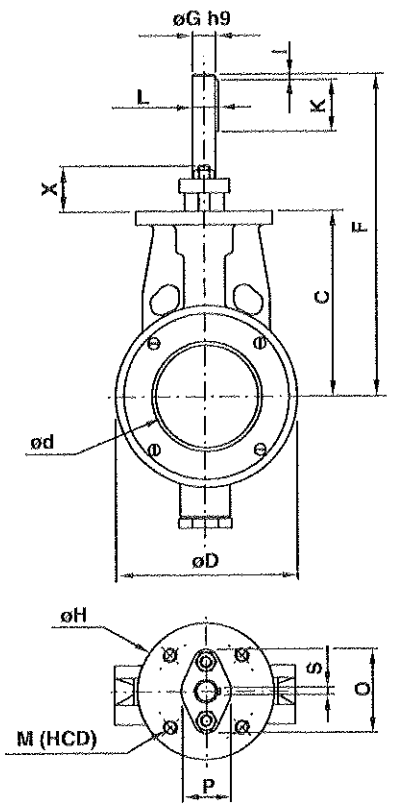

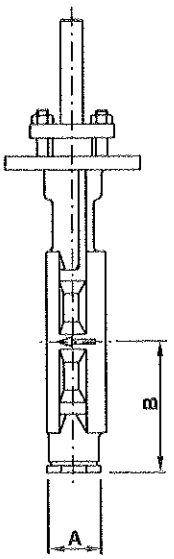

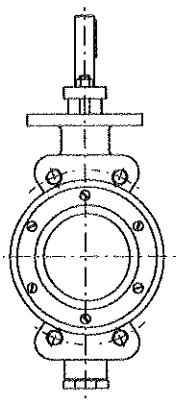

DN 450-1200

VSS (measure in mm, weight in kg)

DN	A	B	C	øD	ød	F	øG	øH	I	K	L	M	(HCD)	O	P	S	X	Weight	DN
80	50	105	150	133	70	270	20	120	5	45	22,5	M12	90	74	44	6	40	7	**80**
100	52	115	163	160	90	283	20	120	5	45	22,5	M12	90	74	44	6	40	8,5	**100**
125	56	130	175	190	116	295	20	120	5	45	22,5	M12	90	74	44	6	40	11	**125**
150	56	140	195	215	140	315	25	120	5	45	28	M12	90	78	50	8	40	14	**150**
200	60	175	235	270	187	355	25	120	5	45	28	M12	90	78	50	8	40	19	**200**
250	68	205	275	324	236	410	30	150	5	45	33	M12	120	92	58	8	50	30	**250**
300	78	240	290	375	285	425	35	150	5	50	38	M12	120	100	64	10	50	43	**300**
350	78	310	315	435	331	450	40	150	5	50	43	M12	120	108	70	12	50	56	**350**
400	102	340	340	490	382	550	50	150	10	80	53,5	M12	120	124	82	14	50	85	**400**
450	114	385	370	535	429	580	50	150	10	80	53,5	M12	120	124	82	14	50	109	**450**
500	127	415	400	590	479	610	60	200	6	90	64	M16	160	147	96	18	60	150	**500**
600	154	475	450	695	579	675	70	200	6	110	74,5	M16	160	162	112	20	60	221	**600**
700	165	530	515	810	674	730	70	200	6	110	74,5	M16	160	162	112	20	60	299	**700**
750	165	545	538	860	680	765	70	200	10	110	74,5	M16	160	162	112	20	60	360	**750**
800	190	600	600	915	774	825	80	200	10	120	85	M16	160	183	120	22	76	420	**800**
900	203	640	645	1010	900	890	80	200	10	120	85	M20	160	183	120	22	76	530	**900**
1000	216	705	730	1110	975	975	80	250	10	120	85	M20	205	200	200	22	85	710	**1000**
1200	254	805	800	1300	1175	1055	100	250	10	125	106	M20	205	200	200	28	85	1140	**1200**

VSS with accessories

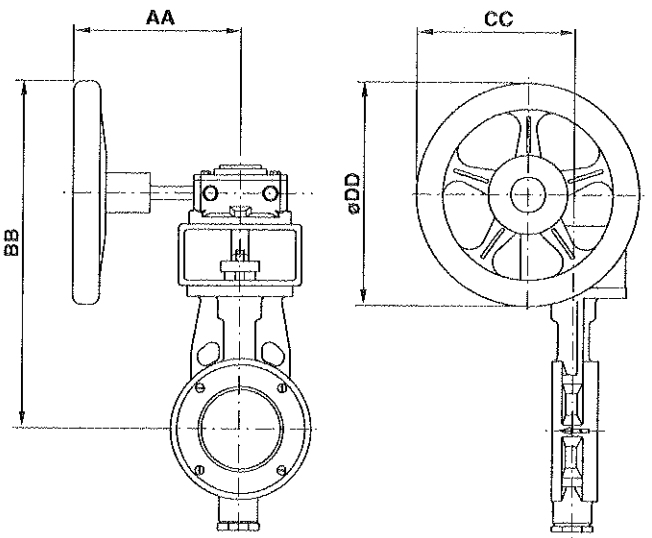

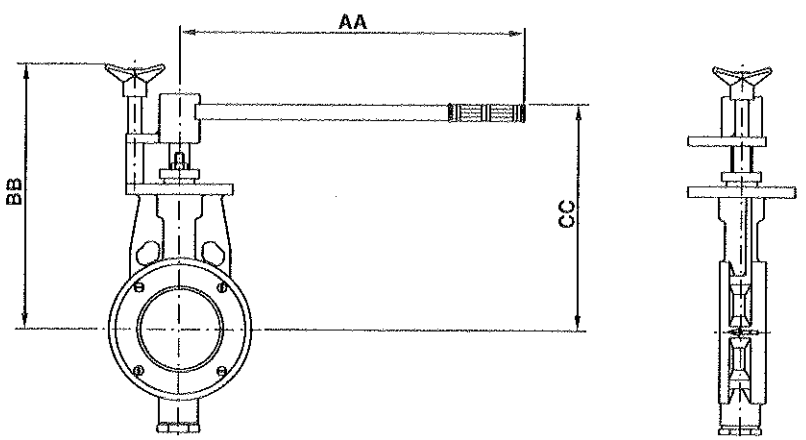

BUTTERFLY VALVE WITH GEAR (Measure in mm , weight in kg)							BUTTERFLY VALVE WITH LEVER (Measure in mm, weight in kg)					
DN	Type	AA	BB	CC	øDD	Weight	LEVER	AA	BB	CC	Weight	DN
80	M10/F07	190	395	190	255	15	HV31	350	320	260	10	80
100	M10/F07	190	410	190	255	16,5	HV31	350	335	275	12	100
125	M10/F07	190	420	190	255	19	HV31	500	345	285	15	125
150	M10/F07	190	440	190	255	22	–					150
200	M10/F07	190	480	190	255	27	–					200
250	M12/F12	228	595	230	305	42	–					250
300	M12/F12	228	610	230	305	55	–					300
350	M12/F12	228	635	230	305	68	–					350
400	M14/F14	250	690	270	355	106	–					400
450	M14/F14	250	720	270	355	130	–					450
500	M15/F16	335	805	353	460	186	–					500
600	MFF/S3	480	840	240	360	301	–					600
700	MFF/S3	480	905	240	360	379	–					700
750	MFF/S3	480	930	240	360	440	–					750
800	MJF/S5	500	970	280	360	426	–					800
900	MJF/S5	500	1035	280	360	640	–					900
1000	MJF/S5	500	1120	280	360	820	–					1000
1200	MJF/S5	500	1250	280	360	1250	–					1200

VSS with actuator type S/SR

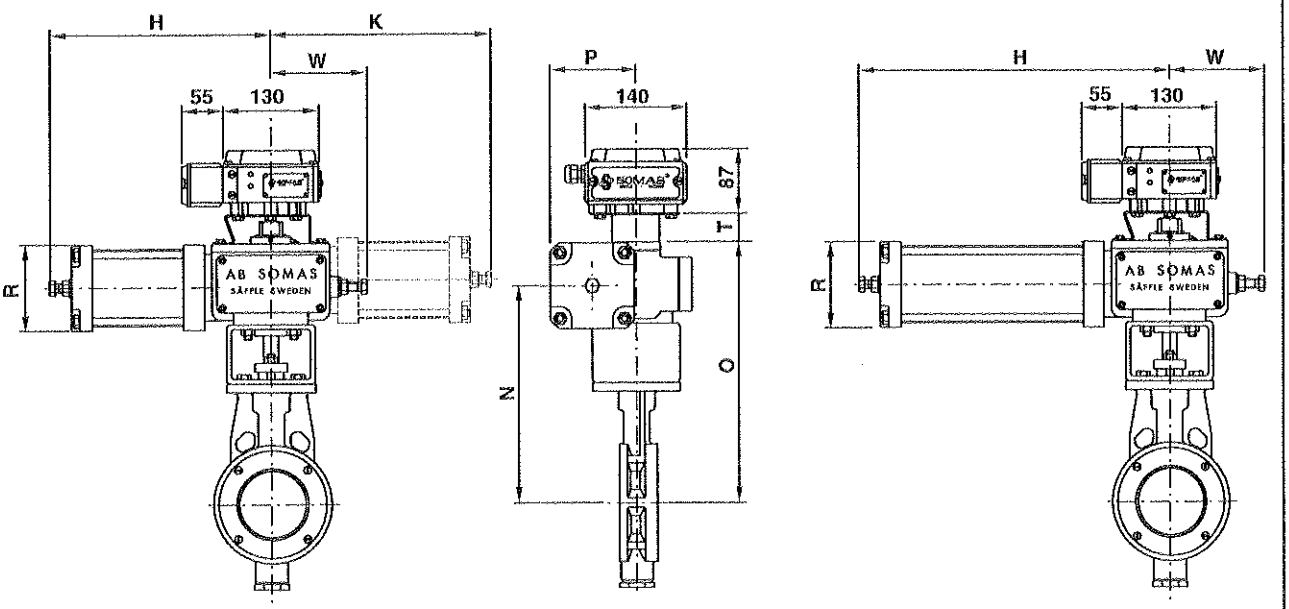

BUTTERFLY VALVE WITH S-ACTUATOR (Measure in mm, weight in kg)											BUTTERFLY VALVE WITH SR-ACTUATOR (Measure in mm, weight in kg)									
DN	Actuator	H	K	N	O	P	R	T	W	Weight	Actuator	H	K	N	O	P	R	T	W	Weight
80	S21	300	–	281	340	118	116	39	130	22	SR21x	610	–	281	340	132	144	39	130	32
100	S21	300	–	294	353	118	116	39	130	24	SR21x	610	–	294	353	132	144	39	130	34
125	S23	300	–	306	365	132	144	39	130	33	SR23x	610	–	306	365	151	182	39	130	56
150	S22	300	–	326	385	132	144	39	130	36	SR22x	785	–	326	386	151	182	39	130	59
200	S22	300	–	361	420	132	144	39	130	43	SR22x	785	–	361	420	151	182	39	130	66
250	S31	410	–	420	521	174	182	45	200	65	SR31x	1050	–	420	521	198	230	45	200	122
300	S31	410	–	435	545	174	182	45	200	79	SR32x	1050	1050	435	545	198	230	45	–	136
350	S32	410	410	480	579	174	182	45	–	100	SR32x	1050	1050	480	579	198	230	45	–	214
400	S41	530	–	546	675	220	230	54	250	164	–									
450	S41	530	–	576	705	220	230	54	250	204	–									
500	S42	530	530	607	735	220	230	54	–	253	–									
600	S42	530	530	657	785	220	230	54	–	318	–									
700	S46	537	–	744	848	295	380	54	266	383	–									
750	S46	537	–	769	873	295	380	54	266	410	–									
800	S47	537	556	787	913	295	380	54	–	475	–									
900	S47	537	556	852	978	295	380	54	–	620	–									
1000	S48	537	537	937	1063	295	380	54	–	760	–									
1200	–										–									

For units with the positioner type SP 400 you have to add 1,5 kg
For units with the positioner type SPE 400 you have to add 2,5 kg

x = depends on type of spring-return. See table on page 7.

VSS with actuator type C/CR

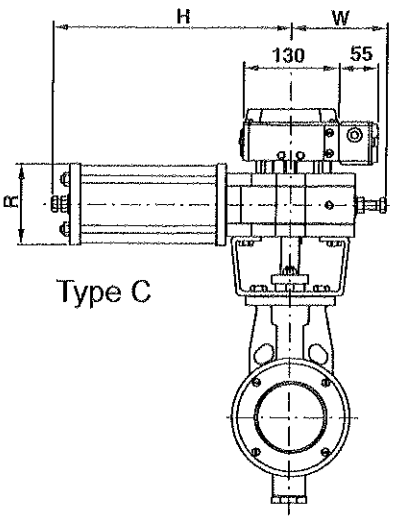

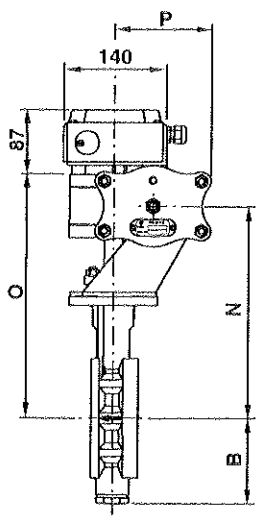

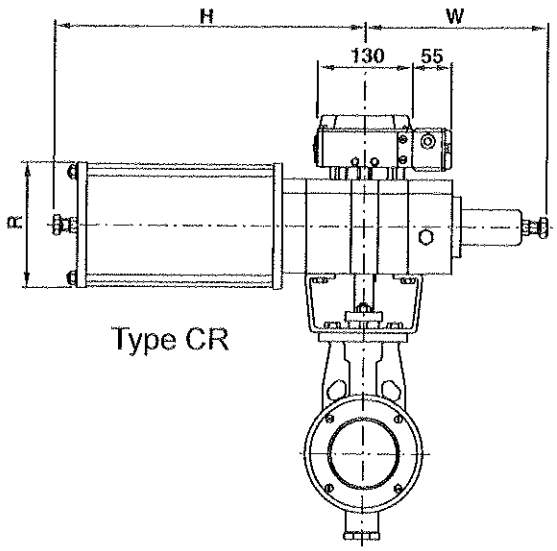

BUTTERFLY VALVE WITH C-ACTUATOR (Measure in mm, weight in kg)									BUTTERFLY VALVE WITH CR-ACTUATOR (Measure in mm, weight in kg)							
DN	Actuator	H	N	O	P	R	W	Weight	Actuator	H	N	O	P	R	W	Weight
80	C2120	325	268	311	132	110	130	17	CR2120x	420	289	353	163	136	250	27
100	C2120	325	281	324	132	110	130	18,5	CR2120x	420	302	366	163	136	250	28,5
125[1]	C2120	325	293	336	132	110	130	21	CR2120x	420	314	379	163	136	250	31
125[2]	C2220	325	293	336	132	138	130	21	CR2220x	425	314	379	163	170	250	31
150	C2225	325	313	356	132	138	130	25	CR2225x	425	334	398	163	170	250	33
200	C2225	325	353	396	132	138	130	30	CR2225x	425	379	443	163	170	250	38

[1]: $\Delta p \leq 10$ bar, [2]: $\Delta p \geq 10$ bar

x = depends on type of spring-return. See table below.

For units with the positioner type SP 400 you have to add 1,5 kg
For units with the positioner type SPE 400 you have to add 2,5 kg

Selection table

Valve DN	Pneumatic actuators: Double acting		Spring return: Spring closes		Spring return: Spring opens		Manual operation: Hand lever	Manual operation: Gear unit	Valve DN
80	S21	C2120	SR211	CR21201	SR212	CR21202	HV31	M10/F07	80
100	S21	C2120	SR211	CR21201	SR212	CR21202	HV31	M10/F07	100
125[1]	S23	C2120	SR231	CR21201	SR232	CR21202	HV31	M10/F07	125[1]
125[2]	S23	C2220	SR231	CR22201	SR232	CR22202	HV31	M10/F07	125[2]
150	S22	C2225	SR221	CR22251	SR222	CR22252	–	M10/F07	150
200	S22	C2225	SR221	CR22251	SR222	CR22252	–	M10/F07	200
250	S31	–	SR311	–	SR312	–	–	M12/F12	250
300	S31	–	SR321	–	SR322	–	–	M12/F12	300
350	S32	–	SR321	–	SR322	–	–	M12/F12	350
400	S41	–	–	–	–	–	–	M14/F14	400
450	S41	–	–	–	–	–	–	M14/F14	450
500	S42	–	–	–	–	–	–	M15/F16	500
600	S42	–	–	–	–	–	–	MFF/S3	600
700	S46	–	–	–	–	–	–	MFF/S3	700
750	S46	–	–	–	–	–	–	MFF/S3	750
800	S47	–	–	–	–	–	–	MJF/S5	800
900	S47	–	–	–	–	–	–	MJF/S5	900
1000	S48	–	–	–	–	–	–	MJF/S5	1000
1200	*)	–	–	–	–	–	–	MJF/S5	1200

[1]: $\Delta p \leq 10$ bar, [2]: $\Delta p \geq 10$ bar. *): Contact Somas for advice.

Further technical information

See also data sheet Si-205, that shows butterfly valve type MTV. For valves with pressure class PN50, see data sheet Si-204.
Technical data for the materials used in the Somas valves, flange standard, steam data, etc can be found in section 6 of the Somas catalogue.

Actuators and accessories

The valves can be fitted with Somas manual-, or pneumatic actuators in accordance with selection table. The valves will be delivered as tested units ready for operation.
See section 4 and 5 of our catalogue, where also positioners, limit switches and solenoid valves are presented.
We can also fit other types of actuators and accessories in accordance with your specification.

For ordering

State required valve code according to the valve specification system below, and state type of actuator, positioner and accessories.

Face to face

Face to face according to the EN 558-1 series 20 and EN 558-2 series 20.

Flange standard

The Somas butterfly valve type VSS is of wafer type for mounting between flanges PN 10-25. The valve can also be delivered with "lugs" and be mounted between flanges according to ANSI, BS and others.

When ordering, please state pressure rating on counter flanges. See the valve specification system below.

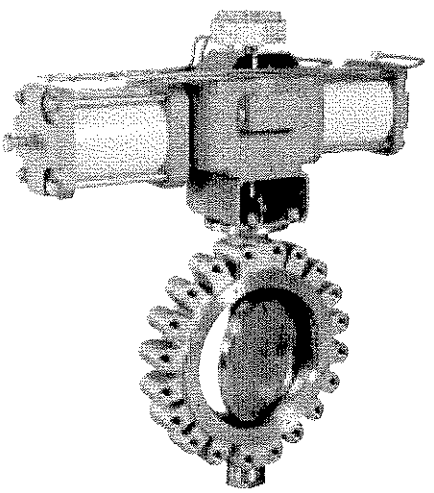

VSS-valve with "lugs"

Valve specification system

VSS - A 5 - A A C - A 1 1 -DN... -PN...

1 2 3 4 5 6 7 8 9 10 11

1 Valve type

2 Valve body design
- A = Wafer type
- F = "Lugs" acc. to DIN

3 Nominal pressure
- 1 = PN6
- 2 = PN10
- 5 = PN25

4 Material - Valve body
- A = SS 2343
- D = W1.4408
- E = SS 2378

5 Material - Disc
- A = SS 2343
- B = SS 2343 Hard chromed
- C = SS 2343 Stellite coated
- S = SS 2378 (Avesta 254 SMO)

6 Material - Seat
- A = PTFE
- C = SS 2377 3-pcs seat
- D = SS 2377 Y-seat
- E = SS 2378 (Avesta 254 SMO)
- G = SS 2562 (904L)
- T = Stellite

7 Material - Shaft
- A = EN 1.4460 (max. t=150°C)
- B = EN 1.4460 Hard chromed
- C = EN 1.4460 Stellite coated
- H = SS 2375

8 Bearings - Valve body/shaft
- 1 = Without bearing
- 3 = Stellite
- 6 = SS 2378 (Avesta 254 SMO)
- 7 = SS 2562 (904L)

9 Stuffing box
- 1 = Graphite
- 2 = PTFE

10 Valve size DN

11 Nominal pressure, counter flange PN

Somas reserve the right to make improvements without prior notice.

SOMAS®

Representative

P.O. Box 107, SE-661 23 SÄFFLE, SWEDEN
PHONE: +46 533 167 00
FAX: +46 533 141 36
E-mail: sales@somas.se / www.somas.se

Ball valves

Type SE

LEUSCH GmbH
Industriearmaturen

Nominal size	**1" to 72" / DN 25 - DN 1800**
Nominal pressure	**ANSI Class 150 - 2500 / PN 10 - PN 420**
Temperatures	**-196°C to +700°C**

DESIGN

Side Entry Ball Valves
- Soft & Metal seated
  - Standard service
  - Cryogenic
  - High temperature
  - Sub sea
  - Abrasive fluids
  - Underground installation

Welded Body Valves
- Soft seated
  - Standard service
  - Sub sea
  - Underground installation

Multi-Ways Ball valves
- 3 & 4 ways – T or L port
- Soft & Metal seated
  - Standard service
  - High temperature
  - Abrasive fluids

SIZE-PRESSURE RANGE

Side Entry
- 2" to 72" – ANSI 150# to ANSI 600#
- 2" to 40" – ANSI 900#
- 2" to 36" – ANSI 1500#
- 2" to 24" – ANSI 2500#
- 1" to 18" – API 2000 to API 10000
- 1" to 4" – API 15000

Welded Body
- 2" to 56" – ANSI 150# to ANSI 600#
- 2" to 36" – ANSI 900#

Top Entry Ball Valves
- Soft & Metal seated
  - Standard service
  - Cryogenic
  - High temperature
  - Sub sea
  - Abrasive fluids

(For Top Entry Ball Valves see data sheet type TE)

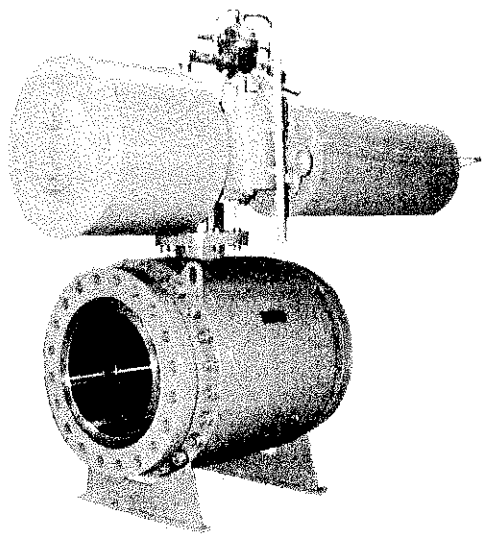

Fig. 1 · High pressure Ball Valve Type SE 16" ANSI 900, with pneum. spring return Actuator and E/P Positioner

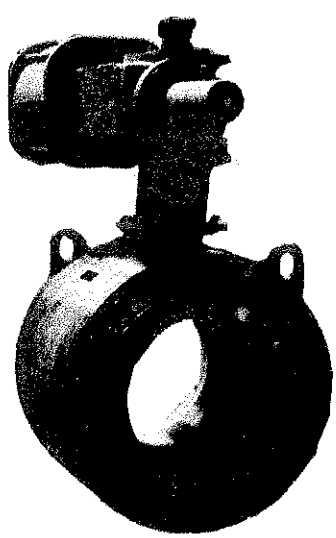

Bild 2 · Tight Shut Off Ball Valve Type SE,

Side entry ball valves
Soft seated

- Trunnion mounted
- 2 piece body (2" to 4")
- 3 piece body (6" and larger)
- Design and construction to API 6D or API 6A
- Minimum wall thickness to ANSI B16.34
- Face to face to API 6D and ANSI B16.10
- Fire safe design to API 6FA and API 607
- Full, reduced or venturi port
- Flanged, Butt Welding or Hub ends
- Hand or motor operated
- Anti static
- Anti blow-out stem
- Bi-directional
- Independent floating self relieving seats
- Primary soft seat
- Secondary metal seat
- Double body seals
- Triple stem seals
- Field replaceable stem seals
- Emergency sealant injection on stem seals area
- Drain plug
- Vent plug (6" and larger)
- Lifting lugs and supporting feet on 6" and larger

Side entry ball valves
Metal seated

- Trunnion mounted
- 2 piece body (2" to 4")
- 3 piece body (6" and larger)
- Design and construction to API 6D or API 6A
- Minimum wall thickness to ANSI B16.34
- Face to face to API 6D and ANSI B16.10
- Fire safe design to API 6FA and API 607
- Full, reduced or venturi port
- Flanged, Butt Welding or Hub ends
- Hand or motor operated
- Anti static
- Anti blow-out stem
- Bi-directional
- Independent floating self relieving seats
- Metal to metal seating
- Double body seals
- Triple stem seals
- Field replaceable stem seals
- Emergency sealant injection on stem seals area
- Drain plug
- Vent plug (6" and larger)
- Lifting lugs and supporting feet on 6" and larger

SIDE ENTRY – ANSI 150#

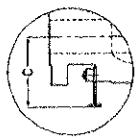

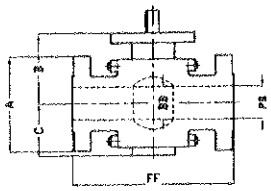

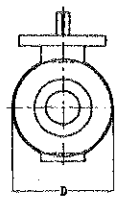

SIZE		FF		BB	PB	A	B	C	D	WEIGHT
	RF	RTJ	WE							KG
2x1.1/2	178	190	216	38	51	152	95	100	145	26
2	178	190	216	51	51	152	105	100	153	28
3x2	203	216	283	51	77	191	105	100	153	31
3	203	216	283	77	77	191	155	125	187	53
4x3	229	241	305	77	102	229	155	125	187	63
4	229	241	305	102	102	229	200	160	230	90
6x4	394	406	47	102	152	279	200	160	230	102
6	394	406	457	152	152	279	250	185	305	163
8x6	457	470	521	152	203	343	250	186	305	188
8	457	470	521	203	203	343	278	222	390	250
10x8	533	546	559	203	254	406	278	222	390	290
10	533	546	559	254	254	406	323	280	467	385
12x10	610	622	635	254	305	483	323	280	467	465
14x10	686	698	762	254	337	535	323	280	467	523
12	610	622	635	305	305	483	340	303	540	562
14x12	685	698	762	305	337	535	340	303	540	622
16x12	762	775	838	305	387	595	340	303	540	707
14	686	698	762	337	337	535	375	330	607	765
16x14	762	775	838	337	387	595	375	330	607	830
16	762	775	838	387	387	595	410	355	675	1030
18x16	864	876	914	387	438	635	410	355	675	1080
20x16	914	927	991	387	489	700	410	355	675	1170
18	864	876	914	438	438	635	440	390	753	1218
20x18	914	927	991	438	489	700	440	390	753	1298
20	914	927	991	489	489	700	495	430	845	1798
24x20	1067	1079	1143	489	591	815	495	430	845	2048
22	991	-	1092	540	540	750	525	475	930	2367
24	1067	1079	1143	591	591	815	585	520	1010	3097
30x24	1295	-	1397	591	737	985	585	520	1010	3347
26	1143	-	1245	635	635	870	630	560	1070	3687
28	1244	-	1347	686	686	925	645	650	1140	4495
30	1295	-	1397	736	736	985	690	700	1220	5230
36x30	1524	-	1728	736	876	1170	690	700	1220	6310
32	1371	-	1524	781	781	1060	740	745	1310	6820
34	1473	-	1626	832	832	1110	760	775	1380	7810
36	1524	-	1728	876	876	1170	810	805	1440	8810
40	1753	-	1956	978	978	1290	895	900	1610	12590
42	1855	-	2083	1022	1022	1345	950	935	1683	14310
48	2134	-	2388	1168	1168	1510	1095	1070	1930	21930
56	2489	-	2489	1384	1384	1735	1300	1250	2273	34120

SIDE ENTRY – ANSI 300#

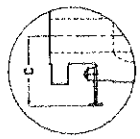

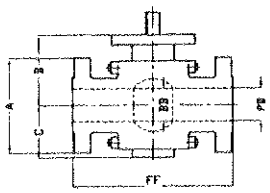

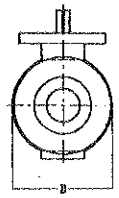

SIZE	FF			BB	PB	A	B	C	D	WEIGHT
	RF	RTJ	WE							KG
2x1.1/2	216	232	216	38	51	165	95	100	145	27
2	216	232	216	51	51	165	105	100	153	29
3x2	283	298	283	51	77	210	105	100	153	34
3	283	298	283	77	77	210	155	125	187	57
4x3	305	321	305	77	102	254	155	125	187	65
4	305	321	305	102	102	254	200	160	230	95
6x4	403	419	457	102	152	318	200	160	230	118
6	403	419	457	152	152	318	250	203	305	185
8x6	502	517	521	152	203	381	250	203	305	222
8	502	517	521	203	203	381	278	232	390	287
10x8	568	584	559	203	254	445	278	232	390	297
10	568	584	559	254	254	455	333	298	477	507
12x10	648	664	635	254	305	520	333	298	477	597
14x10	762	778	762	254	337	58	333	298	477	648
12	648	664	635	305	305	520	360	333	540	740
14x12	762	768	762	305	337	585	360	333	540	820
16x12	838	854	838	305	387	650	360	333	540	970
14	762	778	762	337	337	585	395	350	630	1038
16x14	838	854	838	337	387	650	395	350	630	1130
16	838	854	838	387	387	650	433	398	698	1428
18x16	914	930	914	387	438	710	433	398	698	1598
20x16	991	1010	991	387	489	775	433	398	698	1668
18	914	930	914	438	438	710	460	410	770	1602
20x18	991	1010	991	438	489	775	460	410	770	1797
20	991	1010	991	489	489	775	505	470	855	2207
24x20	1143	1165	1143	489	591	915	505	470	855	2667
22	1092	1114	1092	540	540	840	530	485	940	2797
24	1143	1165	1143	591	591	915	590	550	1025	3470
30x24	1397	1422	1397	591	736	1090	590	550	1025	4490
26	1245	1270	1245	635	635	970	635	585	1085	4670
28	1346	1372	1346	686	686	1035	645	670	1150	5780
30	1397	1422	1397	736	736	1090	700	730	1240	6600
36x30	1727	1756	1727	736	876	1270	700	730	1240	8190
32	1524	1553	1524	781	781	1150	750	770	1320	7940
34	1626	1654	1626	832	832	1205	765	800	1393	9050
36	1727	1756	1727	876	876	1270	810	825	1450	10100
40	1956	-	1956	978	978	1240	905	920	1620	13790
42	2083	-	2083	1022	1022	1290	960	955	1690	16120
48	2170	-	2170	1168	1168	1465	1100	1105	1943	24070
56	2743	-	2743	1384	1384	1710	1300	1275	2280	38710

SIDE ENTRY – ANSI 600#

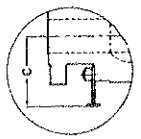

FOR 6" AND LARGER

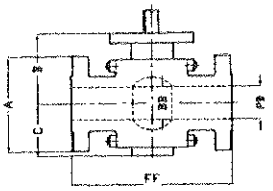

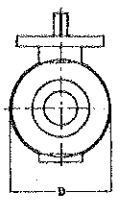

SIZE		FF		BB	PB	A	B	C	D	WEIGHT
	RF	RTJ	WE							KG
2x1.1/2	292	295	292	38	51	165	95	100	145	30
2	292	295	292	51	51	165	105	100	160	33
3x2	356	359	356	51	77	210	105	100	160	40
3	356	359	356	77	77	210	165	130	190	64
4x3	432	435	432	77	102	273	165	130	190	80
4	432	435	432	102	102	273	210	162	234	114
6x4	559	562	559	102	152	356	210	162	234	153
6	559	562	559	152	152	356	253	203	305	255
8x6	660	664	660	152	203	419	253	203	305	290
8	660	664	660	203	203	419	290	257	405	487
10x8	787	791	787	203	254	510	290	257	405	547
10	787	791	787	254	254	510	333	310	490	760
12x10	838	841	838	254	305	560	333	310	490	810
14x10	889	892	889	254	337	605	333	310	490	915
12	838	841	838	305	305	560	380	350	580	1070
14x12	889	892	889	305	337	605	380	350	580	1140
16x12	991	994	991	305	387	685	380	350	580	1350
14	889	892	889	337	337	605	395	360	630	1085
16x14	991	994	991	337	387	685	395	360	630	1308
16	991	994	991	387	387	685	433	413	702	1527
18x16	1092	1095	1092	387	438	745	433	413	702	1682
20x16	1194	1200	1194	387	489	815	433	413	702	2087
18	1092	1095	1092	438	438	745	470	430	775	2097
20x18	1194	1200	1194	438	489	815	470	430	775	2377
20	1194	1200	1194	489	489	815	505	490	863	2640
24x20	1397	1406	1397	489	591	940	505	490	863	3250
22	1296	1305	1296	540	540	870	545	510	950	3790
24	1397	1406	1397	591	591	940	595	570	1030	4740
30x24	1651	1664	1651	591	736	1130	595	570	1030	5770
26	1448	1460	1448	635	635	1015	635	620	1093	5650
28	1549	1562	1549	686	686	1075	665	690	1170	6760
30	1651	1664	1651	736	736	1130	710	750	1255	8380
36x30	2083	2098	2083	736	876	1315	710	750	1255	10380
32	1778	1794	1778	781	781	1195	755	780	1327	9740
34	1930	1746	1930	832	832	1245	780	815	1405	11340
36	2083	2098	2083	876	876	1315	815	840	1465	13300
40	2337	2337	2337	978	978	1320	915	940	1640	18340
42	2437	2437	2437	1022	1022	1405	970	980	1720	21360
48	2540	2540	2540	1168	1168	1595	1105	1120	1970	31200
56	2949	2949	2949	1384	1384	1855	1300	1290	2305	47490

SIDE ENTRY – ANSI 900#

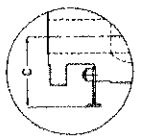

FOR 6" AND LARGER

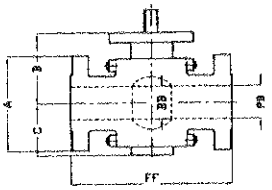

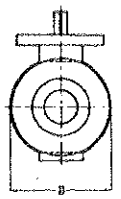

SIZE		FF		BB	PB	A	B	C	D	WEIGHT
	RF	RTJ	WE							KG
2x1.1/2	368	371	368	38	51	216	105	105	150	40
2	368	371	368	51	51	216	105	105	160	50
3x2	381	384	381	51	77	241	105	105	160	53
3	381	384	381	77	77	241	165	130	190	76
4x3	457	460	457	77	102	292	165	130	190	97
4	457	460	457	102	102	292	210	167	237	150
6x4	610	613	610	102	152	381	210	167	237	210
6	610	613	610	152	152	381	260	210	320	367
8x6	737	740	737	152	203	470	260	210	320	447
8	737	740	737	203	203	470	295	266	420	600
10x8	838	841	838	203	254	545	295	266	420	700
10	838	841	838	254	254	545	345	330	515	1027
12x10	965	968	965	254	305	610	345	330	515	1148
14x10	1029	1038	1029	254	324	640	345	330	515	1235
12	965	968	965	305	305	610	390	380	605	1558
14x12	1029	1038	1029	305	324	640	390	380	605	1643
16x12	1130	1140	1130	305	375	705	390	380	605	1738
14	1029	1038	1029	324	324	640	400	370	640	1477
16x14	1130	1140	1130	324	375	705	400	370	640	1717
16	1130	1140	1130	375	375	705	440	435	715	2157
18x16	1219	1232	1219	375	425	785	440	435	715	2437
20x16	1321	1333	1321	375	473	855	440	435	715	2887
18	1219	1232	1219	425	425	785	482	500	800	2860
20x18	1321	1333	1321	425	473	855	482	500	800	3260
20	1321	1333	1321	473	473	855	530	500	900	4220
24x20	1549	1568	1549	473	571	1040	530	500	900	5400
24	1549	1568	1549	571	571	1040	615	630	1060	6850
30x24	1880	1902	1880	571	714	1230	615	630	1060	8750
26	1651	1674	1651	619	619	1085	650	650	1120	8040
28	1753	1775	1753	667	667	1170	670	710	1230	9970
30	1880	1902	1880	714	714	1230	725	780	1300	12210
36x30	2286	2315	2286	857	857	1460	725	780	1300	15420
32	2032	2054	2032	762	762	1315	785	810	11360	11870
34	2159	2188	2159	810	810	1395	805	850	1470	17230
36	2286	2315	2286	857	857	1460	845	900	1530	19920

SIDE ENTRY – ANSI 1500#

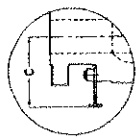

FOR 6" AND LARGER

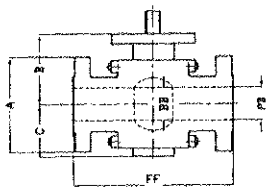

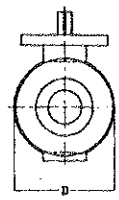

SIZE		FF		BB	PB	A	B	C	D	WEIGHT
	RF	RTJ	WE							KG
2x1.1/2	368	371	38	38	51	216	105	105	150	45
2	368	371	51	51	51	216	105	105	150	53
3x2	470	473	51	51	77	267	105	105	160	66
3	470	473	77	77	77	267	165	130	190	98
4x3	546	549	77	77	102	311	165	130	190	126
4	546	549	102	102	102	311	215	167	245	200
6x4	705	711	102	102	146	394	215	167	245	290
6	705	711	146	146	146	394	260	230	345	485
8x6	832	841	146	146	194	483	260	230	345	575
8	832	841	194	194	194	483	300	285	450	827
10x8	991	1000	194	194	241	585	300	285	450	1032
10	991	1000	241	241	241	585	365	350	555	1507
12x10	1130	1146	241	241	289	675	365	350	555	1767
14x10	1257	1276	241	241	317	750	365	350	555	2152
12	1130	1146	289	289	289	675	420	423	710	2272
14x12	1257	1276	289	289	317	750	420	423	710	2537
16x12	1384	1406	289	289	362	825	420	423	710	2807
14	1257	1276	317	317	317	750	440	430	770	2880
16x14	1384	1406	317	317	362	825	440	430	770	3280
16	1384	1406	362	362	362	825	480	500	850	4120
18x16	1537	1559	362	362	407	916	480	500	850	4980
20x16	1664	1686	362	362	457	985	480	500	850	5150
18	1537	1559	407	407	407	916	550	600	980	6260
20x18	1664	1686	407	407	457	985	550	600	980	7540
20	1664	1686	457	457	457	985	620	650	1020	9120
24x20	2043	2071	457	457	534	1170	620	650	1020	10950
24	2043	2071	543	534	534	1170	700	720	1290	14320

Leusch reserve the right to make improvements without prior notice.

Edition: 2002-08

LEUSCH GMBH INDUSTRIEARMATUREN • Ziegeleistraße 10 • D-41472 Neuss
Phone +49 2131 7699-0 • Fax 7699-29 • e-mail: sales@leusch.de / www.leusch.de

rotork
fluid system

GP AND GH RANGE FLUID POWER ACTUATORS

PNEUMATIC AND HYDRAULIC ACTUATORS FOR QUARTER TURN VALVES

date of issue 01/01

Publication F100

GP and GH SCOTCH YOKE 90° ACTUATORS

Symmetrical Scotch Yoke

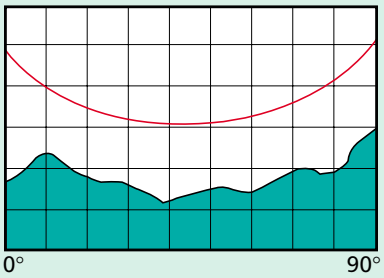

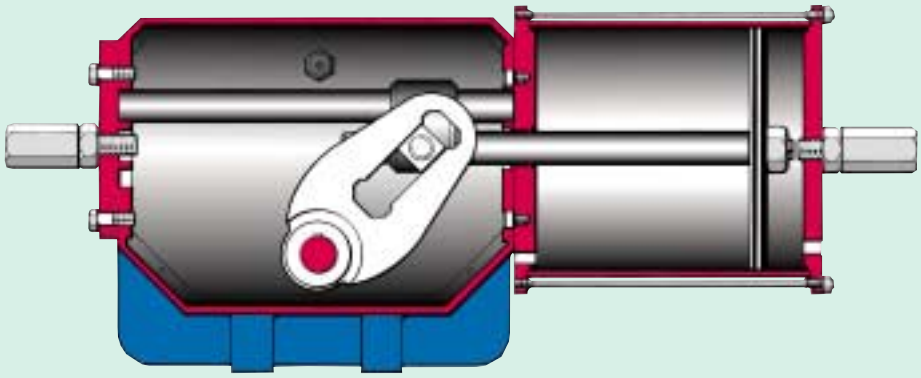

GP and GH Scotch Yoke Actuators are designed to operate ball, butterfly and plug valves requiring a quarter turn movement for either on/off or modulating duty. This classic design in its symmetrical form delivers torque in a manner shown in this diagram. It affords a rugged yet compact design for operating valves that require higher peak torque near the open or closed extremities of valve stroke.

GP and GH Actuators are alternatively supplied with canted torque arms, where the machine is biased to deliver more torque at one extremity of stroke. Use of canted torque arms can further reduce the cost, weight and size of actuation where the torque demand of the valve is highest at one end of stroke - normally at the close position.

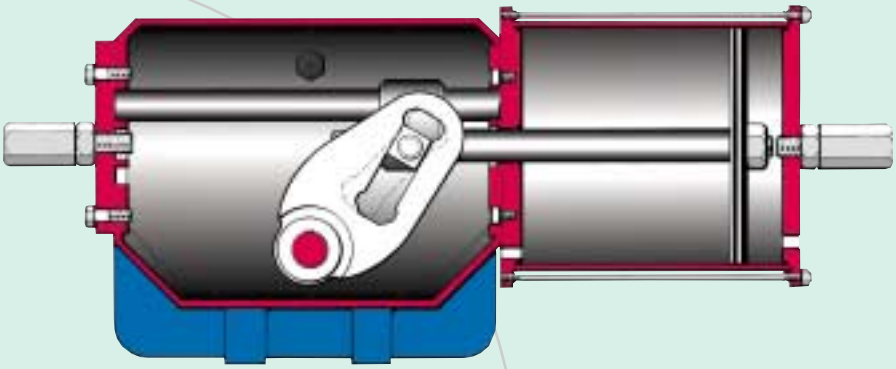

Canted Scotch Yoke

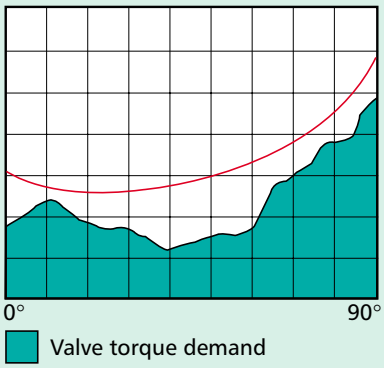

ROTORK ACTUATORS - MODULAR CONSTRUCTION

Rotork GP and GH Range actuators share a modular construction design. The centre body is available in five sizes. A pneumatic cylinder can be attached to either or both sides. A spring can cylinder can also be fitted to either side for Emergency Shut Down (ESD) applications. Modular construction and stocking of components by Rotork Fluid System Centres and a worldwide network of distributors facilitates quick delivery times.

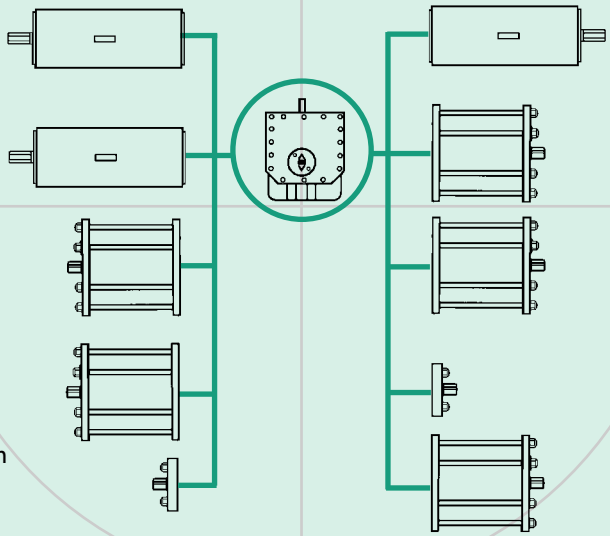

Safe and versatile

Spring return units can be assembled to provide spring return operation in either direction. The spring return module is inherently safe since it can only be removed from the centre body after all spring forces have been released.

GP RANGE QUARTER-TURN PNEUMATIC ACTUATORS

rotork fluid system

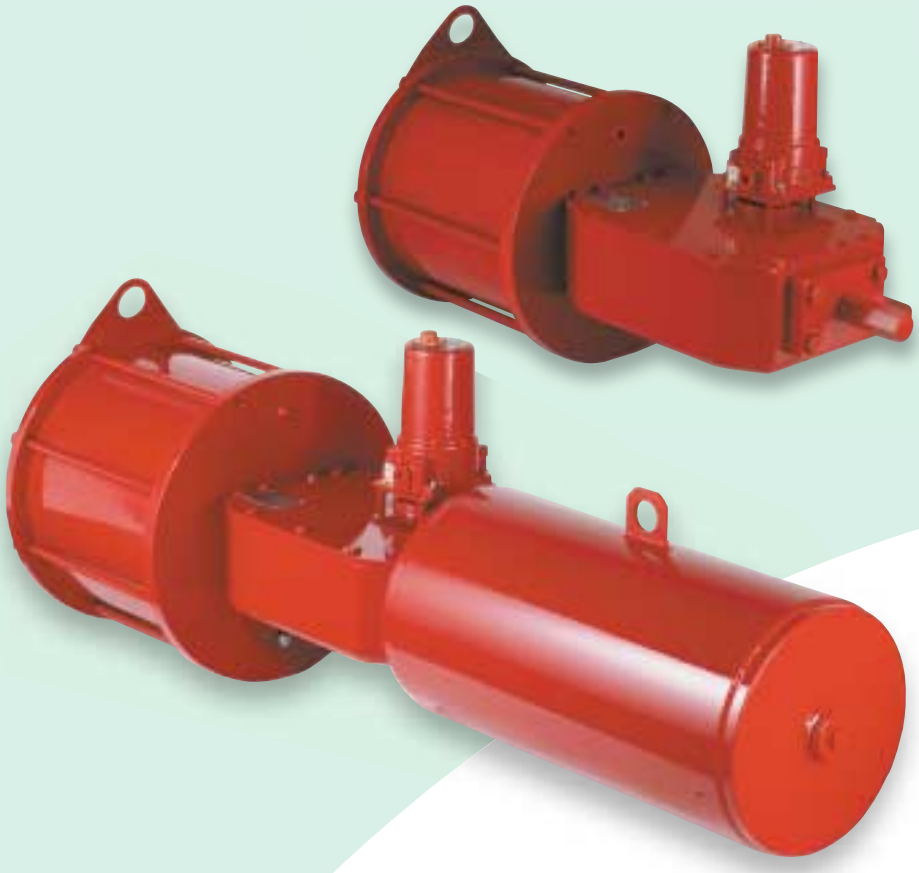

GP RANGE ACTUATORS for pneumatic operation
Torques available
Up to 250,000Nm 2 Million inch pounds
Normal operating pressures
Up to 12 bar (174 psi) GG Range for high pressure gas also available

GH RANGE QUARTER-TURN HYDRAULIC ACTUATORS

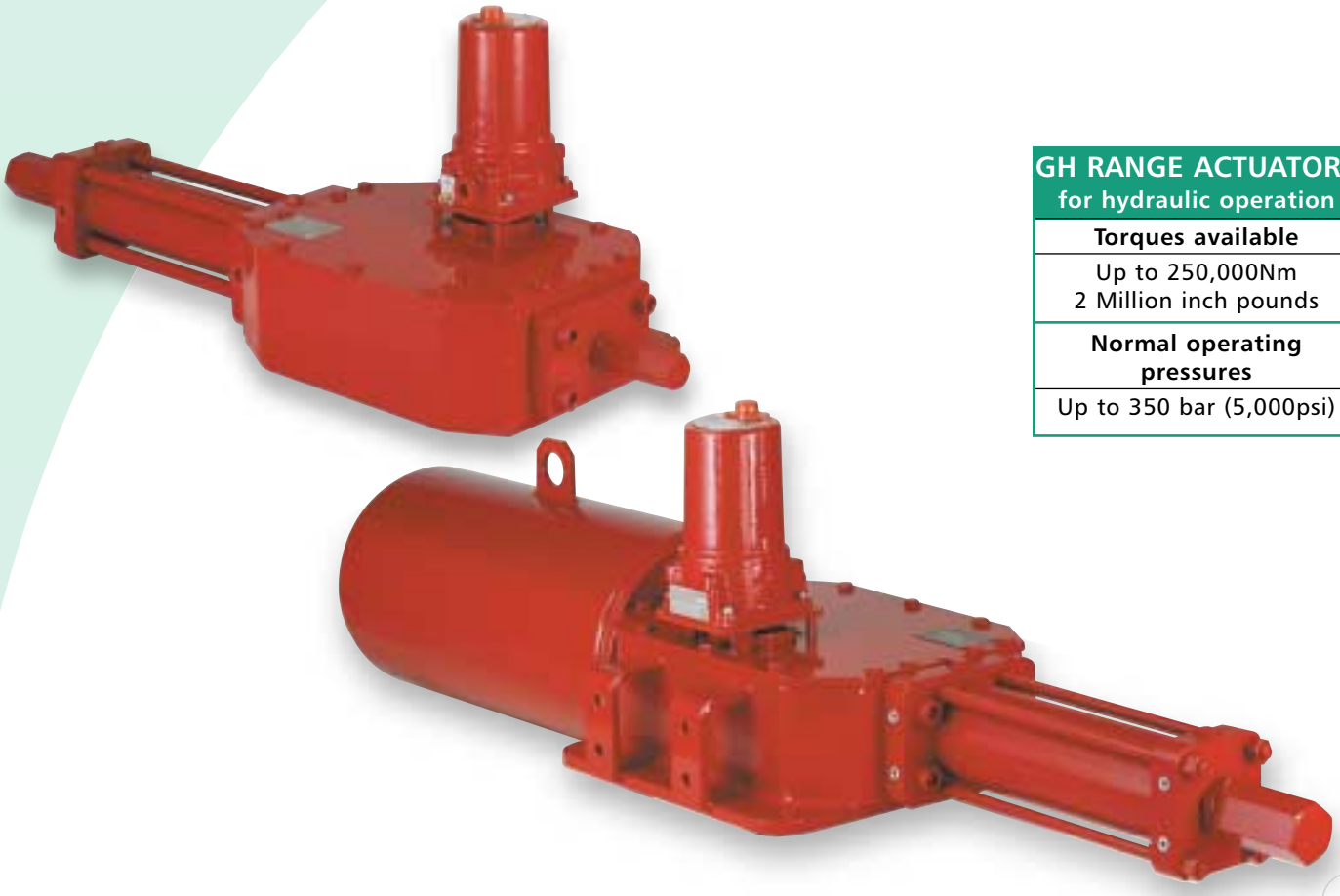

GH RANGE ACTUATORS for hydraulic operation
Torques available
Up to 250,000Nm 2 Million inch pounds
Normal operating pressures
Up to 350 bar (5,000psi)

INSIDE THE GP RANGE ACTUATOR

Pneumatic double acting actuator illustrated, also available as spring return type

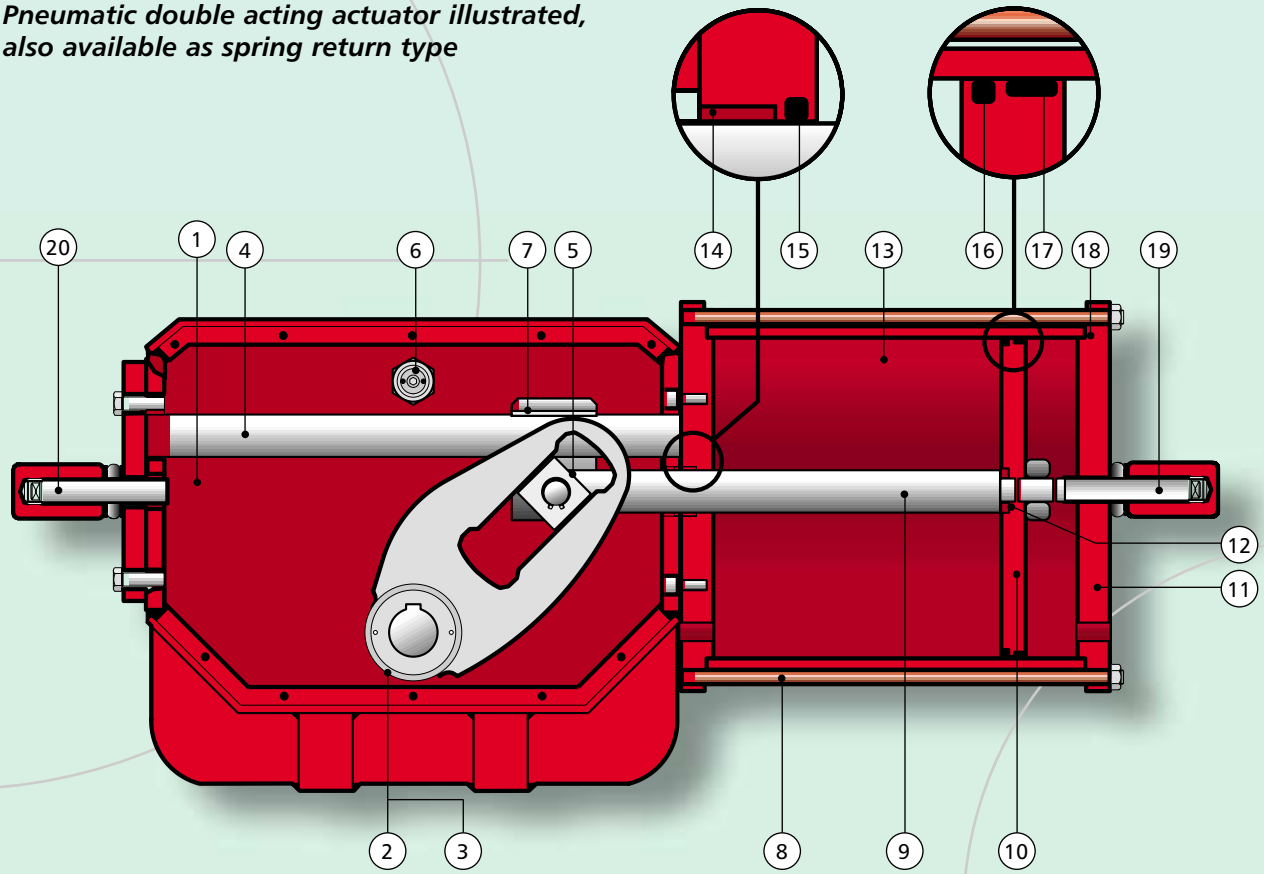

ITEM	DESCRIPTION	MATERIAL	U.S. STANDARD EQUIVALENCE
1	Housing	Carbon Steel	ASTM A 283 gr.D
2	Yoke	Carbon Steel	API 5LX gr.X 52+ASTM A%£& CL1
3	Yoke Bushing	Bronze	ASTM B427 ALLOY UNS N. C90800
4	Thrust Bar	Alloy Steel (Chromium plated)	AISI SAE 9840
5	Sliding Block	Bronze	ASTM B427 ALLOY UNS N. C90800
6	Vent Valve	Stainless Steel	AISI 304
7	Bushing	Steel, Bronze, PTFE	
8	Tie Rod	Alloy Steel	AISI SAE 9840
9	Piston Rod	Alloy Steel (Chromium plated)	AISI SAE 9840
10	Piston	Carbon Steel	ASTM A 283 gr.D
11	End Flange	Carbon Steel	ASTM A 283 gr.D
12	O-Ring*	NBR	
13	Cylinder Tube	Carbon Steel (ENP)	API 5LX gr.X52
14	Bushing	Steel + Bronze + PTFE	
15	Seals*	NBR + PTFE + Graphite	
16	O-Ring*	NBR	
17	Sliding Ring	PTFE + Graphite	
18	O-Ring*	NBR	
19	Stop Setting Screw	Alloy Steel	AISI SAE 9840
20	Stop Setting Screw	Alloy Steel	AISI SAE 9840

Full specification on CD ROM

Rotork Fluid System has available a CD ROM with an overview of our extensive line of fluid power products. It also contains an interactive sizing guide, downloadable dimension drawings, schematics, specifications and assorted technical information sheets.
To obtain a copy for your PC, contact the Rotork Fluid System office nearest you.

Paint specification

Offshore service application to protect against severe weathering, chemical atmospheres, salt spray and petroleum products.

Surface preparation
Sandblasting to grade SA 2.1/2

Prime coat
Inorganic zinc 75 microns DFT

Intermediate coat
epoxy 110 microns DFT

Final coat
Polyurethane 40 microns DFT

Colour
RAL 3011 Dark red 225 microns total DFT

INSIDE THE GH RANGE ACTUATOR

rotork fluid system

Hydraulic spring return actuator illustrated, also available as double acting type

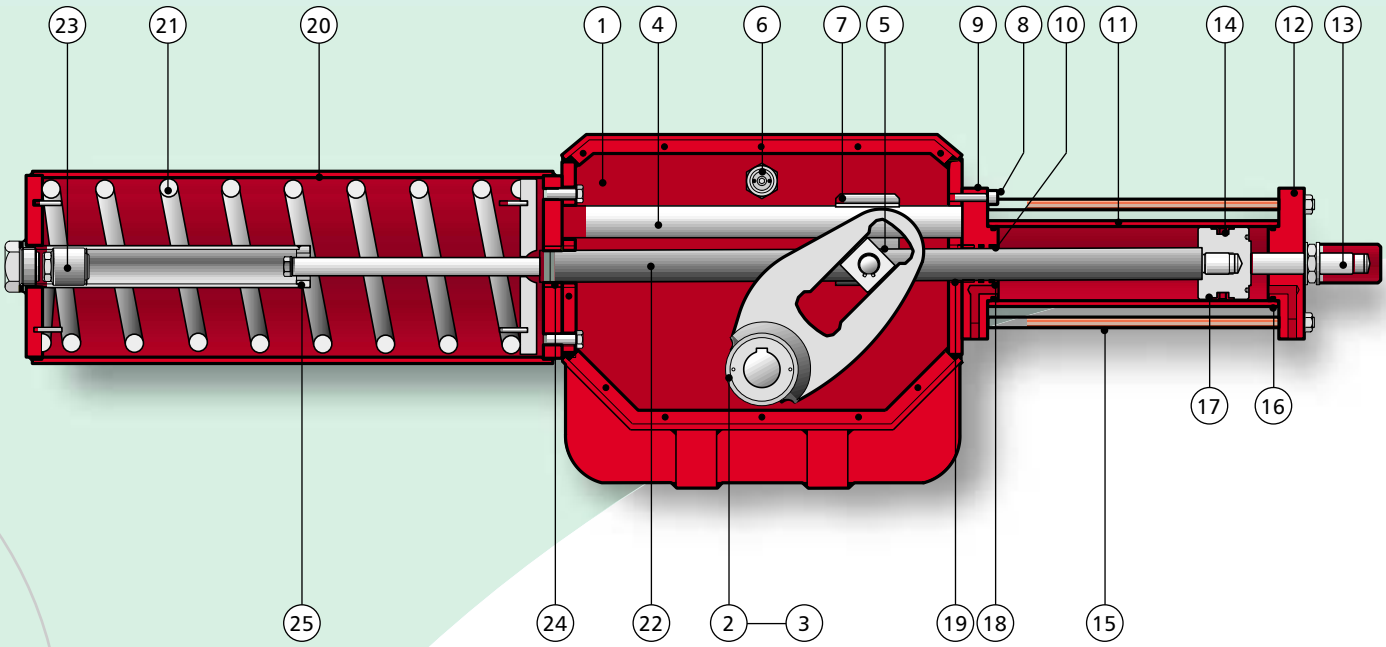

ITEM	DESCRIPTION	MATERIAL	US STANDARD EQUIVALENCE
1	Housing	Carbon Steel	ASTM A 283 gr.D
2	Yoke	Carbon Steel	API 5LX grX 52 + ASTM A537 CL1
3	Yoke Bushing	Bronze	ASTM B427 Alloy UNS N. C90800
4	Thrust Bar	Alloy Steel (Chromium plated)	AISI SAE 9840
5	Sliding Block	Bronze	ASTM B427 Alloy UNS N. C 90800
6	Vent Valve	Stainless Steel	AISI 304
7	Bushing	Steel, Bronze, PTFE	
8	Screw	Alloy Steel	AISI SAE 9840
9	Head Flange	Carbon Steel	ASTM A 283 gr.D
10	O-Ring*	NBR	
11	Cylinder	Carbon Steel (ENP)	ASTM A 283 gr.D
12	Bottom Flange	Carbon Steel	ASTM A 283 gr.D
13	Stop Setting Screw	Alloy Steel	AISI SAE 9840
14	Seals*	NBR + PTFE	
15	Tie Rod	Alloy Steel	AISI SAE 9840
16	O-Ring*	NBR	
17	Piston	Carbon Steel	ASTM A283 gr.D
18	Seal*	NBR + PTFE + Bronze	
19	Bushing	Steel + Bronze + PTFE	
20	Spring Cartridge	Carbon Steel	ASTM A 283 gr.D
21	Spring	Alloy Steel	ASTM A 29 gr.9254
22	Spring Cartridge Stem	Alloy Steel (Chromium Plated)	AISI SAE 9840
23	Stop Setting Screw	Alloy Steel	AISI SAE 9840
24	Bushing	Steel, Bronze, PTFE	
25	Bushing	Steel, Bronze, PTFE	

Rotork Fluid System - Approvals and Industry Standards

All hydraulic actuators are flushed as standard. Flushing to NAS1638 class 6 is available on request.
EN 10204 3.1b Certification for critical components.

Actuators and controls in accordance with UK health and safety requirements for pipeline safety regulations SI 825 (1996).

Actuator Design calculation procedure approval by Lloyds (report no. 094/5152).

Rotork ensure that where applicable actuators offered will be in full compliance with EU pressure equipment directive PED SI-2001.

Actuators are to IP66 standards.

Hydrostatic valve and actuator testing facilities available.

*** Actuator Seals**

Standard **NBR** -20°C to 60°C (-4°F to 140°F)
High Temp **Viton** >60°C (>140°F)
Low Temp **Fluorosilicone** <-20°C (<-4°F)

KEY DESIGN FEATURES

Every Rotork Fluid System actuator is built to provide long and efficient service with minimum maintenance. The design, engineering and materials used in construction ensure optimum performance even in the harshest environments. Listed here are some of the most important features that enable Rotork GP and GH actuators to achieve and maintain this high level of service.

The GP and GH actuators are of a rugged, efficient and compact design incorporating an internal chromium plated guide bar to absorb side loads during operation of the scotch yoke mechanism.

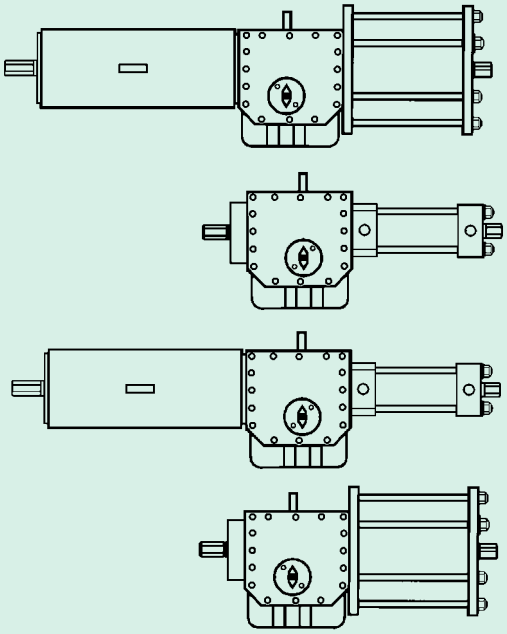

GP/GH Range Quarter-turn operation:

- Standard range covers torque requirements up to 250,000 Nm (2 million inch pounds) - higher output torques are available on request.
- Double acting and single acting (spring return) versions are available.
- Carbon steel scotch yoke mechanism - available in either symmetric or canted form, to follow application-specific valve requirements with minimum cost and weight.
- Totally enclosed weatherproof housing in fabricated carbon steel and complete with bottom relief valve to avoid any undesired over-pressurisation.
- Bronze sliding blocks on the torque arm to ensure minimum friction and long service life.
- Alloy steel chromium plated thrust bar to support the transverse loads of the scotch yoke.
- Carbon steel, electroless nickel plated cylinders fitted with mechanical end stop to ensure accurate angular stroke adjustment +/-5°
- Carbon steel piston with dynamic floating seal to reduce friction and avoid stick-slip effect even after prolonged periods without operation.
- Chromium plated piston rod.
- For spring return versions the spring is totally enclosed in a carbon steel enclosure cartridge.
- Scotch yoke centre body designed so that the spring can only be removed in the fully relaxed state - thus avoiding the possibility of injury during disassembly.
- Standard valve position indicator.
- Double acting actuators can be supplied with emergency tanks to allow operation during supply failure.

CONTROLS

rotork fluid system

Control component packages are a part of any actuator/valve installation. Rotork has extensive experience in the design and assembly of all types of fluid power control systems to satisfy any customer requirement for on/off, modulating or ESD service. Packages can be mounted on a panel or in a cabinet and mounted either on the actuator or at a remote location.

Emergency and Manual override

Emergency manual operating is guaranteed using the optional jackscrew with handwheel. Reduction gearing for large actuators, declutchable and removable handwheels are also available.

For larger, high torque actuators, hydraulic manual override units are also available.

Limit switch

Specially designed for use in extreme environments, the MB1 limit switch has a mechanical position indicator, weather proof protection class IP 67 and is explosion proof to CENELEC EN 50014 and EN 50018 EEx-d-IIC T6 (see publication F600).

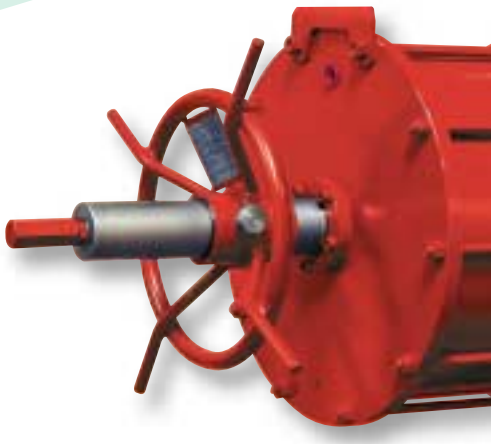

Optional emergency handwheel (above) and limit switch (left)

FLOWPAK INTEGRATED CONTROL SYSTEMS

In addition to the conventional control solutions generally associated with pneumatic and hydraulic systems, Rotork offers a versatile, integral control package called Flowpak. All control components are placed within a single enclosure mounted on the actuator. This has many advantages including greatly simplified commissioning. Flowpak also integrates pneumatic and hydraulic controls with digital supervisory systems. For more information on Flowpak request publication F610E.

KEY DESIGN FEATURES

- Manifold block integrates all pneumatic or hydraulic piping.
- Certified explosion proof assembly covered by a single certificate.
- Certified submersible for 72 hours at 50 metres.
- Rotatable terminal compartment simplifies conduit connections.
- Digital communication networks are available for Profibus, Foundation Fieldbus and Rotork Pakscan.

Rotork Fluid System Centres of Excellence

Rotork Fluid System
Rotork Controls Inc
675 Mile Crossing Blvd.
Rochester, NY 14624
USA
Tel: +1 716 328 1550
Fax: + 1 716 328 5599
Email: info@rotork.com

Rotork Fluid System
Fluid System s.r.l
Via di Coselli 13/15
55060 Coselli, Lucca
Italy
Tel: +39 0583 94811
Fax: +39 0583 403482
Email: fluid@fluidsystem.it

Rotork Fluid System
Rotork Controls (Singapore) Pte Ltd
426 Tagore Industrial Avenue
Singapore 787808
Tel: + 65 457 1233
Fax: + 65 457 6011
Email: mail@rotork.com.sg

Rotork Fluid System
Regina House, Ring Road,
Bramley, Leeds LS13 4ET
UK
Tel: +44 113 236 3312
Fax: +44 113 236 3310
Email: mail@rotorkfluidsystem.co.uk

Rotork Fluid System
Rotork Controls (Canada) Ltd
#9, 820-28th Street NE
Calgary, Alberta T2A 6K1
Canada
Tel: + 1 403 569 9455
Fax: + 1 403 569 9414
Email: mail@rotork.ca

Rotork Fluid System
Rotork Controls (Canada) Ltd
#1-2, 5650 Tomken Road
Mississauga, Ontario L4W 4P1
Canada
Tel: +1 905 602 5665
Fax: +1 905 602 5669
Email: mail@rotork.ca

Rotork Fluid System
Rotork Controls Inc
Suite 368
Southwest Freeway
Houston, Texas 77074
USA
Tel: + 1 713 782 5888
Fax: +1 713 782 8524
Email: info@rotork.com

Rotork Fluid System
Rotork Controls Inc
2180 South McDowell Blvd.
Petaluma, CA 94954
USA
Tel: + 1 707 769 4880
Fax: + 1 707 769 4888
Email: info@rotork.com

All Rotork Fluid System actuators are manufactured under a third party accredited ISO9001 quality assurance program

GP Range Actuator Torque Data

GP/S - PNEUMATIC SPRING RETURN - FAIL CLOSE

Actuator Size	MOP bar	MAWP bar	Position of stroke	Spring Torque Nm
GP-065S-235*/C1	10.5	12	**End**	**718**
			Mid	515
			Break	989
GP-065S-280*/C1	8.5	12	**End**	**706**
			Mid	507
			Break	978
GP-065S-335*/C1	6	12	**End**	**688**
			Mid	496
			Break	962
GP-065S-235*/C2	12	12	**End**	**1,146**
			Mid	820
			Break	1,619
GP-065S-280*/C2	8.5	12	**End**	**1,133**
			Mid	823
			Break	1,607
GP-065S-335*/C2	6	12	**End**	**1,115**
			Mid	812
			Break	1,591
GP-065S-335*/C3	7	12	**End**	**1,782**
			Mid	1,293
			Break	2,579
GP-065S-280*/C4	8.5	12	**End**	**1,339**
			Mid	944
			Break	1,843
GP-065S-335*/C4	7	12	**End**	**1,321**
			Mid	934
			Break	1,826
GP-065S-385*/C4	5	12	**End**	**1,314**
			Mid	930
			Break	1,819
GP-085S-235*/C1	12	12	**End**	**951**
			Mid	714
			Break	1,444
GP-085S-280*/C1	10.5	12	**End**	**934**
			Mid	704
			Break	1,429
GP-085S-335*/C1	7	12	**End**	**911**
			Mid	690
			Break	1,408
GP-085S-280*/C2	12	12	**End**	**1,499**
			Mid	1,137
			Break	2,359

SYMMETRICAL

Pneumatic Stroke Torque (Nm) at Operating Pressure (bar)									
3.0	3.5	4.0	5.0	5.5	6.0	7.0	8.5	10.5	12.0
		415	827	1,032	1,238	1,650	2,267	3,090	
		340	577	696	814	1,052	1,408	1,882	
		747	1,129	1,319	1,510	1,892	2,464	3,227	
511	808	1,105	1,698	1,995	2,292	2,886	3,776		
398	567	737	1,075	1,245	1,414	1,753	2,261		
835	1,106	1,378	1,921	2,192	2,464	3,007	3,821		
1,262	1,687	2,112	2,961	3,386	3,811				
831	1,073	1,314	1,798	2,039	2,281				
1,521	1,910	2,298	3,076	3,464	3,853				
					492	910	1,537	2,373	3,000
					450	692	1,056	1,541	1,900
					1,080	1,462	2,036	2,801	3,375
			939	1,235	1,532	2,126	3,016		
			711	882	1,052	1,394	1,906		
			1,490	1,761	2,033	2,576	3,390		
502	927	1,351	2,201	2,626	3,050				
456	701	946	1,437	1,682	1,927				
1,089	1,478	1,866	2,644	3,033	3,421				
			1,007	1,432	1,857	2,706			
			863	1,109	1,356	1,849			
			1,970	2,359	2,748	3,525			
			654	951	1,248	1,841	2,732		
			560	731	902	1,244	1,758		
			1,281	1,553	1,824	2,367	3,182		
	642	1,067	1,917	2,341	2,766	3,616			
	553	798	1,288	1,533	1,778	2,268			
	1,270	1,659	2,436	2,824	3,213	3,990			
1,027	1,588	2,149	3,271						
781	1,104	1,426	2,071						
1,622	2,135	2,649	3,675						
			934	1,206	1,477	2,019	2,833	3,918	4,811
			711	869	1,026	1,341	1,813	2,442	2,933
			1,494	1,747	2,000	2,505	3,264	4,275	5,036
513	900	1,288	2,063	2,450	2,837	3,612	4,774	6,324	
464	687	910	1,356	1,579	1,802	2,249	2,918	3,810	
1,104	1,462	1,821	2,537	2,895	3,254	3,970	5,045	6,478	
1,506	2,068	2,630	3,754	4,315	4,877	6,001			
1,054	1,373	1,693	2,332	2,651	2,971	3,610			
2,012	2,526	3,040	4,069	4,583	5,097	6,126			
			961	1,354	1,746	2,531	3,709	5,279	6,457
			845	1,072	1,298	1,752	2,432	3,339	4,011
			1,970	2,329	2,688	3,407	4,484	5,921	6,998

GP/S - PNEUMATIC SPRING RETURN - FAIL CLOSE

Actuator Size	MOP bar	MAWP bar	Position of stroke	Spring Torque Nm
GP-085S-335*/C2	7	12	**End**	**1,476**
			Mid	1,131
			Break	2,337
GP-085S-385*/C2	6	12	**End**	**1,465**
			Mid	1,117
			Break	2,327
GP-085S-335*/C3	8.5	12	**End**	**2,357**
			Mid	1,812
			Break	3,799
GP-085S-385*/C3	7	12	**End**	**2,347**
			Mid	1,816
			Break	3,789
GP-085S-280*/C4	12	12	**End**	**1,772**
			Mid	1,318
			Break	2,689
GP-085S-335*/C4	8.5	12	**End**	**1,748**
			Mid	1,315
			Break	2,667
GP-085S-385*/C4	6	12	**End**	**1,738**
			Mid	1,309
			Break	2,658
GP-100S-385*/C1	10.5	12	**End**	**3,260**
			Mid	2,785
			Break	6,345
GP-100S-435*/C1	7	12	**End**	**3,254**
			Mid	2,780
			Break	6,339
GP-100S-485*/C1	6	12	**End**	**3,226**
			Mid	2,922
			Break	6,314
GP-100S-435*/C2	8.5	12	**End**	**4,485**
			Mid	3,510
			Break	7,465
GP-100S-485*/C2	7	12	**End**	**4,458**
			Mid	3,494
			Break	7,440
GP-100S-535*/C2	6	12	**End**	**4,462**
			Mid	3,511
			Break	7,444
GP-130S-385*/C3	12	12	**End**	**6,171**
			Mid	4,360
			Break	8,519

SYMMETRICAL

Pneumatic Stroke Torque (Nm) at Operating Pressure (bar)									
3.0	3.5	4.0	5.0	5.5	6.0	7.0	8.5	10.5	12.0
	945	1,507	2,631	3,193	3,755	4,879			
	835	1,159	1,807	2,131	2,456	3,104			
	1,955	2,469	3,497	4,011	4,526	5,554			
1,454	2,196	2,939	4,423	5,166	5,908				
1,138	1,565	1,991	2,845	3,271	3,698				
2,421	3,100	3,779	5,138	5,817	6,496				
			865	1,427	1,989	3,113	4,798		
			865	1,202	1,539	2,214	3,225		
			2,606	3,120	3,634	4,663	6,205		
		1,173	2,657	3,400	4,142	5,626			
		1,148	2,020	2,456	2,891	3,763			
		2,888	4,246	4,925	5,604	6,962			
			561	954	1,346	2,131	3,309	4,880	6,058
			561	796	1,031	1,501	2,205	3,142	3,811
			1,694	2,053	2,412	3,131	4,208	5,645	6,722
		1,108	2,232	2,794	3,356	4,479	6,165		
		955	1,605	1,929	2,254	2,904	3,873		
		2,194	3,222	3,736	4,251	5,279	6,821		
1,055	1,797	2,539	4,024	4,766	5,508				
923	1,352	1,782	2,640	3,070	3,499				
2,145	2,824	3,503	4,862	5,541	6,220				
					2,711	4,477	7,127	10,660	
					2,533	3,564	5,111	7,174	
					6,196	7,812	10,236	13,468	
			3,381	4,509	5,636	7,891			
			2,943	3,607	4,270	5,597			
			6,809	7,841	8,872	10,935			
		3,291	6,095	7,496	8,898				
		2,889	4,552	5,383	6,214				
		6,727	9,292	10,574	11,856				
				3,147	4,275	6,530	9,912		
				2,802	3,458	4,769	6,736		
				6,595	7,627	9,690	12,784		
			4,733	6,135	7,536	10,340			
			3,729	4,544	5,360	6,991			
			8,046	9,328	10,611	13,175			
		4,365	7,776	9,482	11,187				
		3,538	5,527	6,522	7,516				
		7,709	10,830	12,390	13,950				
				2,189	3,335	5,626	9,064	13,647	17,092
				2,084	2,748	4,075	6,067	8,722	10,695
				5,178	6,223	8,312	11,446	15,625	18,777

GP/S - PNEUMATIC SPRING RETURN - FAIL CLOSE

Actuator Size	MOP bar	MAWP bar	Position of stroke	Spring Torque Nm
GP-130S-435*/C3	10.5	12	**End**	**6,162**
			Mid	4,354
			Break	8,511
GP-130S-485*/C3	10.5	12	**End**	**6,126**
			Mid	4,399
			Break	8,478
GP-130S-535*/C3	7	12	**End**	**6,131**
			Mid	4,402
			Break	8,482
GP-130S-585*/C3	6	12	**End**	**6,149**
			Mid	4,413
			Break	8,499
GP-130S-385*/C4	12	12	**End**	**7,381**
			Mid	5,053
			Break	9,625
GP-130S-435*/C4	12	12	**End**	**7,372**
			Mid	5,048
			Break	9,617
GP-130S-485*/C4	8.5	12	**End**	**7,336**
			Mid	5,027
			Break	9,584
GP-130S-535*/C4	7	12	**End**	**7,341**
			Mid	5,133
			Break	9,589
GP-130S-585*/C4	6	12	**End**	**7,359**
			Mid	5,145
			Break	9,606
GP-130S-635*/C4	5.5	12	**End**	**7,394**
			Mid	5,061
			Break	9,637
GP-160S-385*/C0	12	12	**End**	**7,092**
			Mid	5,005
			Break	9,771
GP-160S-435*/C0	12	12	**End**	**7,081**
			Mid	4,999
			Break	9,761
GP-160S-485*/C0	10.5	12	**End**	**7,036**
			Mid	4,973
			Break	9,720
GP-160S-535*/C0	8.5	12	**End**	**7,043**
			Mid	4,976
			Break	9,726

SYMMETRICAL

Pneumatic Stroke Torque (Nm) at Operating Pressure (bar)									
3.0	3.5	4.0	5.0	5.5	6.0	7.0	8.5	10.5	12.0
			4,232	5,714	7,197	10,162	14,609	20,539	
			3,283	4,136	4,989	6,695	9,254	12,666	
			7,046	8,403	9,759	12,472	16,541	21,966	
		4,113	7,799	9,642	11,485	15,171	16,539	22,210	
		3,255	5,369	6,425	7,482	9,596	9,989	13,213	
		6,939	10,311	11,997	13,683	17,055	17,010	22,198	
2,830	5,073	7,315	11,800	14,043	16,285	20,770			
2,479	3,804	5,102	7,673	8,959	10,245	12,797			
5,765	7,816	9,868	13,971	16,022	18,074	22,177			
5,481	8,162	10,843	16,206	18,887	21,568				
4,082	5,610	7,138	10,195	11,723	13,251				
8,190	10,643	13,096	18,001	20,454	22,907				
						4,319	7,750	12,325	15,949
						3,348	5,326	7,964	10,056
						7,122	10,248	14,416	17,767
			2,894	4,377	5,859	8,824	13,272	19,202	23,649
			2,518	3,371	4,225	5,932	8,492	11,906	14,435
			5,823	7,179	8,536	11,248	15,318	20,743	24,811
		2,776	6,462	8,305	10,148	13,833	19,362		
		2,447	4,564	5,623	6,682	8,799	11,976		
		5,715	9,087	10,773	12,459	15,831	20,889		
	3,735	5,978	10,463	12,705	14,947	19,432			
	3,022	4,382	6,907	8,192	9,478	12,037			
	6,593	8,644	12,747	14,799	16,850	20,954			
4,144	6,825	9,506	14,869	17,550	20,231				
3,274	4,810	6,346	9,419	10,955	12,491				
6,966	9,419	11,872	16,778	19,231	21,684				
7,046	10,205	13,364	19,682	22,841					
4,948	6,753	8,559	12,170	13,975					
9,621	12,511	15,401	21,182	24,072					
				3,729	5,154	8,004	12,280	17,980	22,518
				3,132	3,952	5,593	8,054	11,335	13,932
				7,039	8,339	10,938	14,838	20,037	24,229
		2,580	6,270	8,115	9,960	13,650	19,186	26,566	32,102
		2,431	4,555	5,616	6,678	8,802	11,987	16,234	19,382
		5,989	9,365	11,053	12,741	16,117	21,181	27,933	32,997
	3,830	6,124	10,711	13,005	15,298	19,886	26,766	35,941	
	3,193	4,484	7,066	8,356	9,647	12,229	16,102	21,265	
	7,132	9,230	13,427	15,525	17,624	21,821	28,116	36,509	
4,526	7,317	10,108	15,690	18,481	21,272	26,854	35,227		
3,604	5,199	6,794	9,984	11,579	13,175	16,365	21,150		
7,769	10,322	12,876	17,982	20,536	23,089	28,196	35,856		

GP/S - PNEUMATIC SPRING RETURN - FAIL CLOSE

Actuator Size	MOP bar	MAWP bar	Position of stroke	Spring Torque Nm
GP-160S-585*/C0	7	12	**End**	**7,066**
			Mid	4,990
			Break	9,747
GP-160S-635*/C0	6	12	**End**	**7,109**
			Mid	5,014
			Break	9,786
GP-160S-435*/C1	12	12	**End**	**8,663**
			Mid	6,225
			Break	12,327
GP-160S-485*/C1	10.5	12	**End**	**8,618**
			Mid	6,200
			Break	12,286
GP-160S-535*/C1	8.5	12	**End**	**8,624**
			Mid	6,279
			Break	12,291
GP-160S-585*/C1	7	12	**End**	**8,647**
			Mid	6,293
			Break	12,312
GP-160S-635*/C1	6	12	**End**	**8,690**
			Mid	6,319
			Break	12,352
GP-160S-685*/C1	5.5	12	**End**	**8,665**
			Mid	6,226
			Break	12,328
GP-160S-485*/C2	12	12	**End**	**12,399**
			Mid	8,742
			Break	16,370
GP-160S-535*/C2	8.5	12	**End**	**12,405**
			Mid	8,550
			Break	16,375
GP-160S-585*/C2	8.5	12	**End**	**12,429**
			Mid	8,731
			Break	16,396
GP-160S-635*/C2	7	12	**End**	**12,471**
			Mid	8,757
			Break	16,436
GP-160S-685*/C2	6	12	**End**	**12,446**
			Mid	8,741
			Break	16,412
GP-160S-485*/C3	12	12	**End**	**15,286**
			Mid	10,201
			Break	19,010

SYMMETRICAL

Pneumatic Stroke Torque (Nm) at Operating Pressure (bar)									
3.0	3.5	4.0	5.0	5.5	6.0	7.0	8.5	10.5	12.0
7,825	11,162	14,499	21,173	24,510	27,847	34,521			
5,524	7,427	9,331	13,138	15,041	16,945	20,752			
10,787	13,840	16,893	22,999	26,052	29,105	35,211			
11,437	15,369	19,301	27,164	31,096	35,028				
7,595	9,836	12,077	16,558	18,799	21,040				
14,092	17,689	21,286	28,480	32,077	35,674				
			3,171	5,016	6,861	10,551	16,087	23,467	29,002
			3,077	4,147	5,217	7,357	10,566	14,846	18,003
			7,765	9,453	11,141	14,517	19,582	26,334	31,398
			7,612	9,905	12,199	16,786	23,667	32,842	
			5,708	7,024	8,341	10,973	14,921	20,186	
			11,827	13,926	16,024	20,221	26,516	34,910	
		7,008	12,590	15,381	18,172	23,754	32,127		
		5,414	8,609	10,206	11,804	14,998	19,870		
		11,276	16,383	18,936	21,490	26,596	34,256		
4,726	8,063	11,400	18,074	21,411	24,748	31,422			
4,034	5,948	7,862	11,690	13,604	15,518	19,346			
9,188	12,241	15,294	21,400	24,453	27,505	33,611			
8,338	12,270	16,202	24,065	27,997	31,929				
6,218	8,460	10,701	15,184	17,426	19,667				
12,492	16,089	19,686	26,881	30,478	34,075				
12,173	16,748	21,324	30,475	35,050					
8,370	10,984	13,599	18,828	21,442					
16,001	20,187	24,373	32,745	36,931					
				4,971	7,265	11,852	18,733	27,908	34,789
				4,349	5,673	8,321	12,293	17,589	21,508
				10,103	12,201	16,398	22,693	31,087	37,382
			7,656	10,447	13,238	18,820	27,193		
			5,891	7,497	9,103	12,315	17,132		
			12,559	15,113	17,666	22,773	30,433		
		6,466	13,140	16,477	19,814	26,488	36,499		
		5,253	9,086	11,002	12,918	16,751	22,481		
		11,470	17,576	20,629	23,682	29,788	38,947		
3,404	7,336	11,268	19,131	23,063	26,995	34,858			
3,388	5,658	7,928	12,468	14,738	17,008	21,548			
8,669	12,266	15,863	23,058	26,655	30,252	37,446			
7,239	11,815	16,390	25,541	30,117	34,692				
5,721	8,343	10,965	16,209	18,831	21,453				
12,178	16,364	20,550	28,921	33,107	37,293				
					4,074	8,661	15,542	24,717	31,598
					3,801	6,459	10,445	15,760	19,694
					9,282	13,479	19,774	28,168	34,463

GP/S - PNEUMATIC SPRING RETURN - FAIL CLOSE

Actuator Size	MOP bar	MAWP bar	Position of stroke	Spring Torque Nm
GP-160S-535*/C3	10.5	12	**End**	**15,292**
			Mid	10,205
			Break	19,016
GP-160S-585*/C3	8.5	12	**End**	**15,315**
			Mid	10,218
			Break	19,037
GP-160S-635*/C3	7	12	**End**	**15,358**
			Mid	10,242
			Break	19,076
GP-160S-685*/C3	6	12	**End**	**15,332**
			Mid	10,228
			Break	19,053
GP-160S-735*/C3	5.5	12	**End**	**15,304**
			Mid	10,418
			Break	19,027
GP-160S-535*/C4	10.5	12	**End**	**19,722**
			Mid	13,145
			Break	24,467
GP-160S-585*/C4	8.5	12	**End**	**19,745**
			Mid	13,158
			Break	24,488
GP-160S-635*/C4	7	12	**End**	**19,788**
			Mid	13,182
			Break	24,528
GP-160S-685*/C4	7	12	**End**	**19,763**
			Mid	13,433
			Break	24,504
GP-160S-735*/C4	6	12	**End**	**19,735**
			Mid	13,417
			Break	24,479
GP-160S-785*/C4	5	12	**End**	**19,705**
			Mid	13,399
			Break	24,452
GP-200S-535*/C1	12	12	**End**	**24,096**
			Mid	16,717
			Break	31,293
GP-200S-585*/C1	12	12	**End**	**24,125**
			Mid	16,734
			Break	32,220
GP-200S-635*/C1	12	12	**End**	**24,179**
			Mid	16,765
			Break	32,270

SYMMETRICAL

Pneumatic Stroke Torque (Nm) at Operating Pressure (bar)									
3.0	3.5	4.0	5.0	5.5	6.0	7.0	8.5	10.5	12.0
			4,466	7,257	10,048	15,630	24,003	35,167	
			4,044	5,651	7,258	10,473	15,294	21,723	
			9,641	12,194	14,748	19,854	27,515	37,728	
			9,950	13,287	16,624	23,298	33,309		
			7,248	9,162	11,077	14,906	20,649		
			14,658	17,711	20,764	26,869	36,028		
	4,145	8,077	15,941	19,873	23,804	31,668			
	3,845	6,111	10,642	12,907	15,173	19,704			
	9,347	12,944	20,138	23,736	27,333	34,527			
4,049	8,624	13,200	22,351	26,926	31,501				
3,785	6,510	9,156	14,403	17,026	19,639				
9,259	13,445	17,631	26,003	30,189	34,374				
8,175	13,443	18,711	29,246	34,514					
6,287	9,300	12,313	18,339	21,352					
13,034	17,853	22,672	32,311	37,130					
						9,044	17,417	28,581	
						7,118	11,978	18,458	
						15,374	23,035	33,248	
				6,701	10,038	16,712	26,723		
				5,769	7,695	11,547	17,326		
				13,231	16,284	22,390	31,548		
			9,355	13,287	17,219	25,082			
			7,269	9,544	11,819	16,369			
			15,659	19,256	22,853	30,047			
		6,614	15,765	20,340	24,915	34,066			
		5,717	11,004	13,648	16,291	21,578			
		13,151	21,523	25,709	29,894	38,266			
		12,125	22,661	27,928	33,196				
		9,049	15,066	18,075	21,083				
		18,193	27,832	32,651	37,470				
6,006	12,015	18,024	30,041						
5,349	8,834	12,319	19,289						
12,595	18,092	23,590	34,584						
						9,897	20,323	34,224	45,172
						8,698	14,800	22,936	29,106
						20,272	29,936	42,821	52,544
					11,153	19,508	32,040	48,749	61,765
					9,457	14,373	21,746	31,578	38,607
					21,421	29,129	40,692	56,109	67,724
			10,290	15,227	20,164	30,038	44,848	64,596	79,862
			8,935	11,789	14,644	20,352	28,915	40,332	48,898
			20,631	25,174	29,718	38,804	52,434	70,607	84,280

GP/S - PNEUMATIC SPRING RETURN - FAIL CLOSE

Actuator Size	MOP bar	MAWP bar	Position of stroke	Spring Torque Nm
GP-200S-685*/C1	10.5	12	**End**	**24,146**
			Mid	16,746
			Break	32,240
GP-200S-735*/C1	8.5	12	**End**	**24,111**
			Mid	16,726
			Break	32,208
GP-200S-785*/C1	8.5	12	**End**	**24,074**
			Mid	16,705
			Break	32,173
GP-200S-835*/C1	7	12	**End**	**24,034**
			Mid	16,682
			Break	32,137
GP-200S-935*/C1	6	12	**End**	**23,947**
			Mid	16,632
			Break	32,057
GP-200S-937*/C1	5.5	12	**End**	**23,899**
			Mid	16,605
			Break	32,014
GP-200S-635*/C2	12	12	**End**	**31,617**
			Mid	22,386
			Break	43,819
GP-200S-685*/C2	12	12	**End**	**31,585**
			Mid	22,368
			Break	43,790
GP-200S-735*/C2	10.5	12	**End**	**31,550**
			Mid	22,347
			Break	43,758
GP-200S-785*/C2	8.5	12	**End**	**31,512**
			Mid	22,326
			Break	43,723
GP-200S-835*/C2	7	12	**End**	**31,473**
			Mid	22,503
			Break	43,687
GP-200S-935*/C2	6	12	**End**	**31,385**
			Mid	22,253
			Break	43,607
GP-200S-937*/C2	6	12	**End**	**31,338**
			Mid	22,226
			Break	43,564
GP-201S-935*/C3	8.5	12	**End**	**51,721**
			Mid	38,306
			Break	77,850

SYMMETRICAL

Pneumatic Stroke Torque (Nm) at Operating Pressure (bar)									
3.0	3.5	4.0	5.0	5.5	6.0	7.0	8.5	10.5	12.0
			18,392	24,175	29,957	41,523	58,871	82,002	
			13,647	16,963	20,278	26,908	36,854	50,115	
			28,043	33,334	38,624	49,205	65,076	86,238	
		13,791	27,107	33,765	40,422	53,738	73,712		
		11,024	18,646	22,458	26,269	33,891	45,325		
		23,834	36,016	42,107	48,198	60,380	78,653		
	13,652	21,247	36,436	44,030	51,625	66,814	89,597		
	10,943	15,292	23,990	28,339	32,688	41,386	54,433		
	23,707	30,655	44,551	51,499	58,447	72,342	93,186		
12,007	20,600	29,193	46,378	54,971	63,564	80,749			
9,981	14,864	19,746	29,512	34,394	39,277	49,042			
22,202	30,063	37,924	53,647	61,508	69,369	85,091			
25,008	35,782	46,556	68,105	78,879	89,653				
17,546	23,699	29,852	42,159	48,312	54,465				
34,097	43,954	53,810	73,524	83,380	93,237				
32,060	44,017	55,974	79,889	91,846					
21,589	28,479	35,369	49,149	56,039					
40,548	51,487	62,426	84,304	95,243					
						16,214	31,123	51,000	65,908
						13,660	22,427	34,116	42,495
						31,295	44,934	63,119	76,758
					16,004	27,570	44,918	68,049	85,397
					13,658	20,358	30,409	43,810	53,669
					31,102	41,683	57,555	78,717	94,588
			13,153	19,728	26,302	39,452	59,176	85,475	
			11,935	15,744	19,553	27,171	38,598	53,834	
			28,495	34,539	40,582	52,669	70,800	94,974	
			22,482	30,077	37,671	52,860	75,643		
			17,361	21,739	26,118	34,874	48,009		
			37,029	43,977	50,925	64,821	85,664		
		15,239	32,425	41,017	49,610	66,796			
		13,196	20,611	24,319	28,027	35,442			
		30,403	46,125	53,986	61,848	77,570			
		32,603	54,151	64,925	75,699				
		23,399	35,754	41,931	48,108				
		46,289	66,003	75,859	85,716				
18,106	30,063	42,020	65,935	77,892	89,849				
14,930	21,810	28,689	42,448	49,328	56,207				
33,026	43,965	54,904	76,783	87,722	98,661				
				24,143	34,971	56,627	89,111		
				22,704	29,000	41,591	60,477		
				55,834	65,740	85,552	115,270		

GP/S - PNEUMATIC SPRING RETURN - FAIL CLOSE

Actuator Size	MOP bar	MAWP bar	Position of stroke	Spring Torque Nm
GP-201S-937*/C3	8.5	12	**End**	**51,674**
			Mid	38,279
			Break	77,807
GP-201S-935*/C7	8.5	12	**End**	**40,217**
			Mid	31,549
			Break	66,690
GP-201S-937*/C7	8.5	12	**End**	**40,603**
			Mid	31,800
			Break	67,678
GP-270S-937*/C0	10.5	12	**End**	**68,258**
			Mid	56,374
			Break	122,737
GP-270S-940*/C0	8.5	12	**End**	**68,169**
			Mid	55,769
			Break	122,655
GP-270S-945*/C0	7	12	**End**	**68,021**
			Mid	55,682
			Break	122,520
GP-270S-945*/C2	7	12	**End**	**74,466**
			Mid	66,901
			Break	158,562
GP-270S-962*/C2	6	12	**End**	**74,305**
			Mid	66,803
			Break	158,414
GP-270S-962*/C3	7	12	**End**	**86,356**
			Mid	74,090
			Break	169,438
GP-270S-937*/C4	8.5	12	**End**	**60,930**
			Mid	51,424
			Break	116,032
GP-270S-940*/C4	8.5	12	**End**	**60,841**
			Mid	51,370
			Break	115,951
GP-270S-945*/C4	7	12	**End**	**60,693**
			Mid	51,281
			Break	115,815

MOP = Maximum operating pressure
MAWP = Maximum allowable working pressure.

Max operating pressure is the pressure required to produce the maximum operating torques of the actuator.
Max allowable working pressure is the pressure applicable to a fully stroked actuator against the mechanical stoppers.

SYMMETRICAL

Pneumatic Stroke Torque (Nm) at Operating Pressure (bar)									
3.0	3.5	4.0	5.0	5.5	6.0	7.0	8.5	10.5	12.0
			25,158	37,175	49,192	73,226	109,277		
			23,346	30,327	37,308	51,269	72,211		
			56,762	67,756	78,750	100,738	133,719		
			25,539	36,229	46,918	68,298	100,367		
			23,435	29,677	35,919	48,404	67,131		
			56,409	66,305	76,202	95,995	125,684		
			37,394	49,411	61,428	85,462	121,513		
			30,464	37,443	44,422	58,381	79,318		
			67,957	78,951	89,945	111,932	144,914		
					46,180	78,819	127,778	193,056	
					43,886	62,965	91,583	129,741	
					108,885	138,745	183,536	243,256	
				54,246	72,790	109,879	165,513		
				48,918	59,727	81,345	113,772		
				116,264	133,230	167,161	218,057		
			72,558	94,803	117,048	161,538			
			59,489	72,476	85,463	111,437			
			133,017	153,368	173,719	214,421			
					73,505	117,995			
					68,509	94,957			
					167,202	207,904			
			69,223	95,505	121,787				
			65,799	81,768	97,738				
			163,284	187,328	211,373				
					108,467	161,031			
					89,762	120,554			
					199,187	247,276			
					54,280	86,919	135,878		
					48,938	67,961	96,494		
					116,295	146,155	190,946		
			43,801	62,346	80,890	117,979	173,613		
			42,380	53,329	64,279	86,178	119,026		
			106,708	123,674	140,639	174,571	225,467		
			80,658	102,903	125,148	169,638			
			64,376	77,314	90,253	116,130			
			140,427	160,778	181,129	221,831			

GP/S - PNEUMATIC SPRING RETURN - FAIL CLOSE

Actuator Size	MOP bar	MAWP bar	Position of stroke	Spring Torque Nm
GP-065C-235*/C1	8.5	12	**End**	**1,140**
			Mid	540
			Break	847
GP-065C-280*/C1	6	12	**End**	**1,121**
			Mid	533
			Break	838
GP-065C-335*/C1	4	12	**End**	**1,092**
			Mid	523
			Break	824
GP-065C-235*/C2	8.5	12	**End**	**1,818**
			Mid	876
			Break	1,387
GP-065C-280*/C2	6	12	**End**	**1,798**
			Mid	873
			Break	1,378
GP-065C-335*/C2	4	12	**End**	**1,770**
			Mid	862
			Break	1,364
GP-065C-335*/C3	5.5	12	**End**	**2,827**
			Mid	1,385
			Break	2,212
GP-065C-280*/C4	7	12	**End**	**2,125**
			Mid	1,006
			Break	1,578
GP-065C-335*/C4	5	12	**End**	**2,097**
			Mid	996
			Break	1,564
GP-065C-385*/C4	3.5	12	**End**	**2,084**
			Mid	991
			Break	1,558
GP-085C-235*/C1	10.5	12	**End**	**1,491**
			Mid	755
			Break	1,226
GP-085C-280*/C1	7	12	**End**	**1,482**
			Mid	754
			Break	1,228
GP-085C-335*/C1	5	12	**End**	**1,445**
			Mid	740
			Break	1,209
GP-085C-280*/C2	7	12	**End**	**2,812**
			Mid	1,422
			Break	2,309

CANTED

Pneumatic Stroke Torque (Nm) at Operating Pressure (bar)									
3.0	3.5	4.0	5.0	5.5	6.0	7.0	8.5	10.5	12.0
			648	815	981	1,314	1,813		
			534	652	770	1,006	1,599		
			1,773	2,074	2,374	2,974	3,876		
393	629	865	1,337	1,573	1,809				
350	518	686	1,021	1,189	1,357				
1,311	1,737	2,164	3,016	3,443	3,869				
990	1,328	1,666							
778	1,017	1,256							
2,389	2,999	3,609							
						699	1,198		
						617	976		
						2,297	3,198		
			722	958	1,194				
			638	807	975				
			2,338	2,765	3,191				
	712	1,050							
	634	873							
	2,321	2,931							
			760	1,098					
			730	982					
			3,094	3,704					
			494	730	966	1,438			
			474	646	817	1,160			
			2,011	2,437	2,864	3,716			
	484	822	1,498						
	467	712	1,203						
	1,994	2,604	3,824						
790	1,237								
695	1,016								
2,547	3,353								
			717	936	1,156	1,595	2,253	3,131	
			626	783	940	1,253	1,724	2,351	
			2,326	2,724	3,123	3,920	5,116	6,710	
383	695	1,008	1,633	1,945	2,258	2,883			
381	618	843	1,280	1,511	1,732	2,173			
1,734	2,298	2,862	3,880	4,554	5,118	6,246			
1,173	1,620	2,068	2,962						
961	1,278	1,595	2,229						
3,160	3,967	4,775	6,389						
			400	713	1,025	1,650			
			400	642	885	1,369			
			2,660	3,224	3,788	4,916			

GP/S - PNEUMATIC SPRING RETURN - FAIL CLOSE

Actuator Size	MOP bar	MAWP bar	Position of stroke	Spring Torque Nm
GP-085C-335*/C2	5.5	12	**End**	**2,341**
			Mid	1,219
			Break	2,009
GP-085C-385*/C2	4	12	**End**	**2,325**
			Mid	1,213
			Break	2,001
GP-085C-335*/C3	6	12	**End**	**3,723**
			Mid	1,983
			Break	3,260
GP-085C-385*/C3	5	12	**End**	**3,700**
			Mid	1,957
			Break	3,248
GP-085C-280*/C4	8.5	12	**End**	**2,812**
			Mid	1,422
			Break	2,309
GP-085C-335*/C4	6	12	**End**	**2,774**
			Mid	1,418
			Break	2,291
GP-085C-385*/C4	4	12	**End**	**2,758**
			Mid	1,402
			Break	2,283
GP-100C-385*/C1	7	12	**End**	**5,114**
			Mid	3,084
			Break	5,419
GP-100C-435*/C1	6	12	**End**	**5,162**
			Mid	3,165
			Break	5,476
GP-100C-485*/C1	4	12	**End**	**5,061**
			Mid	3,064
			Break	5,393
GP-100C-435*/C2	6	12	**End**	**7,117**
			Mid	3,837
			Break	6,427
GP-100C-485*/C2	5	12	**End**	**7,073**
			Mid	3,821
			Break	6,406
GP-100C-535*/C2	4	12	**End**	**7,079**
			Mid	3,863
			Break	6,408
GP-130C-385*/C3	10.5	12	**End**	**9,791**
			Mid	4,647
			Break	7,297

CANTED

Pneumatic Stroke Torque (Nm) at Operating Pressure (bar)									
3.0	3.5	4.0	5.0	5.5	6.0	7.0	8.5	10.5	12.0
	709	1,156	2,051	2,498					
	696	1,021	1,671	1,996					
	3,070	3,877	5,492	6,299					
1,114	1,705	2,295							
1,001	1,425	1,850							
3,802	4,868	5,934							
			617	1,064	1,511				
			617	1,015	1,413				
			4,093	4,900	5,707				
			2,031						
			1,796						
			6,646						
			400	713	1,025	1,650	2,587		
			400	642	885	1,369	2,078		
			2,660	3,224	3,788	4,916	6,608		
		835	1,730	2,177	2,624				
		807	1,456	1,780	2,104				
		3,445	5,060	5,867	6,674				
793	1,384	1,974							
774	1,203	1,633							
3,369	4,435	5,501							
						3,378			
						3,091			
						12,128			
			2,544	3,441	4,338				
			2,473	3,146	3,818				
			10,691	12,311	13,931				
		2,444							
		2,389							
		10,442							
				2,358	3,255				
				2,325	2,999				
				10,355	11,975				
			3,620						
			3,282						
			12,634						
	1,970	3,327							
	1,970	3,094							
	9,655	12,105							
					2,541	4,389	7,162	10,858	
					2,394	3,719	5,706	8,355	
					9,800	13,136	18,141	24,813	

GP/S - PNEUMATIC SPRING RETURN - FAIL CLOSE

Actuator Size	MOP bar	MAWP bar	Position of stroke	Spring Torque Nm
GP-130C-435*/C3	7	12	**End**	**9,777**
			Mid	4,642
			Break	7,290
GP-130C-485*/C3	6	12	**End**	**9,720**
			Mid	4,636
			Break	7,262
GP-130C-535*/C3	5	12	**End**	**9,728**
			Mid	4,639
			Break	7,266
GP-130C-585*/C3	4	12	**End**	**9,757**
			Mid	4,635
			Break	7,280
GP-130C-385*/C4	10.5	12	**End**	**11,711**
			Mid	5,332
			Break	8,230
GP-130C-435*/C4	8.5	12	**End**	**11,697**
			Mid	5,327
			Break	8,224
GP-130C-485*/C4	7	12	**End**	**11,640**
			Mid	5,306
			Break	8,196
GP-130C-535*/C4	5.5	12	**End**	**11,648**
			Mid	5,337
			Break	8,200
GP-130C-585*/C4	4	12	**End**	**11,677**
			Mid	5,348
			Break	8,214
GP-130C-635*/C4	4	12	**End**	**11,732**
			Mid	5,368
			Break	8,240
GP-160C-385*/C0	12	12	**End**	**11,254**
			Mid	5,334
			Break	8,369
GP-160C-435*/C0	8.5	12	**End**	**11,236**
			Mid	5,327
			Break	8,361
GP-160C-485*/C0	7	12	**End**	**11,165**
			Mid	5,302
			Break	8,326
GP-160C-535*/C0	6	12	**End**	**11,175**
			Mid	5,305
			Break	8,331

CANTED

Pneumatic Stroke Torque (Nm) at Operating Pressure (bar)									
3.0	3.5	4.0	5.0	5.5	6.0	7.0	8.5	10.5	12.0
			3,242	4,421	5,601	7,961			
			2,874	3,724	4,574	6,275			
			11,065	13,194	15,324	19,583			
		3,148	6,081	7,548	9,014				
		2,862	4,961	6,010	7,059				
		10,895	16,190	18,838	21,485				
2,127	3,911	5,696	9,264						
2,076	3,367	4,657	7,238						
9,052	12,273	15,495	21,937						
4,236	6,370	8,503							
3,641	5,160	6,679							
12,860	16,711	20,563							
						3,325	6,097	9,794	
						2,975	4,958	7,603	
						11,215	16,219	22,892	
			2,178	3,358	4,537	6,897	10,436		
			2,117	2,965	3,814	5,511	8,056		
			9,144	11,274	13,403	17,662	24,051		
		2,084	5,017	6,484	7,950	10,883			
		2,042	4,152	5,207	6,262	8,372			
		8,975	14,269	16,917	19,564	24,858			
2,847	4,185	5,524	8,200	9,985					
2,647	3,605	4,562	6,477	7,753					
10,352	12,768	15,184	20,016	23,237					
3,172	5,306	7,439							
2,880	4,406	5,932							
10,939	14,791	18,642							
5,482	7,996	10,509							
4,532	6,320	8,108							
15,108	19,646	24,184							
				2,824	3,972	6,267	9,711	14,302	17,752
				2,675	3,496	5,138	7,601	10,885	13,322
				11,054	13,126	17,270	23,486	31,774	38,003
			4,846	6,315	7,783	10,720	15,124		
			4,135	5,180	6,225	8,315	11,449		
			14,705	17,355	20,006	25,307	33,258		
	2,905	4,730	8,380	10,206	12,031	15,681			
	2,736	4,037	6,640	7,942	9,243	11,846			
	11,199	14,494	21,083	24,378	27,673	34,262			
3,459	5,680	7,901	12,342	14,563	16,784				
3,149	4,730	6,312	9,474	11,056	12,637				
12,199	16,208	20,217	28,236	32,245	36,254				

GP/S - PNEUMATIC SPRING RETURN - FAIL CLOSE

Actuator Size	MOP bar	MAWP bar	Position of stroke	Spring Torque Nm
GP-160C-585*/C0	5	12	**End**	**11,211**
			Mid	5,318
			Break	8,348
GP-160C-635*/C0	4.5	12	**End**	**11,279**
			Mid	5,343
			Break	8,382
GP-160C-435*/C1	8.5	12	**End**	**13,746**
			Mid	6,672
			Break	10,568
GP-160C-485*/C1	7	12	**End**	**13,675**
			Mid	6,659
			Break	10,553
GP-160C-535*/C1	6	12	**End**	**13,684**
			Mid	6,634
			Break	10,538
GP-160C-585*/C1	5.5	12	**End**	**13,721**
			Mid	6,647
			Break	10,556
GP-160C-635*/C1	4	12	**End**	**13,789**
			Mid	6,673
			Break	10,589
GP-160C-685*/C1	4	12	**End**	**13,748**
			Mid	6,658
			Break	10,569
GP-160C-485*/C2	8.5	12	**End**	**19,675**
			Mid	9,038
			Break	14,003
GP-160C-535*/C2	7	12	**End**	**19,684**
			Mid	9,041
			Break	14,007
GP-160C-585*/C2	6	12	**End**	**19,721**
			Mid	9,098
			Break	14,025
GP-160C-635*/C2	5	12	**End**	**19,789**
			Mid	9,123
			Break	14,058
GP-160C-685*/C2	4	12	**End**	**19,748**
			Mid	9,064
			Break	14,038
GP-160C-485*/C3	8.5	12	**End**	**24,255**
			Mid	10,671
			Break	16,230

CANTED

Pneumatic Stroke Torque (Nm) at Operating Pressure (bar)									
3.0	3.5	4.0	5.0	5.5	6.0	7.0	8.5	10.5	12.0
6,084	8,740	11,395	16,706						
5,050	6,933	8,816	12,582						
16,938	21,732	26,526	36,113						
8,958	12,087	15,215							
7,106	9,317	11,528							
22,127	27,775	33,423							
				3,800	5,268	8,205	12,609		
				3,596	4,648	6,753	9,910		
				14,844	17,494	22,795	30,747		
		2,215	5,865	7,690	9,515	13,166			
		2,907	5,130	6,436	7,742	10,353			
		11,983	18,572	21,867	25,162	31,751			
	3,165	5,386	9,828	12,048	14,269				
	3,105	4,704	7,901	9,500	11,098				
	13,697	17,706	25,725	29,734	33,743				
3,569	6,224	8,880	14,191	16,846					
3,420	5,326	7,232	11,043	12,949					
14,427	19,221	24,014	33,601	38,395					
6,443	9,572	12,700							
5,544	7,773	10,001							
19,616	25,264	30,911							
9,495	13,136	16,777							
7,728	10,314	12,900							
25,125	31,698	38,270							
				3,737	5,562	9,212	14,688		
				3,645	4,962	7,596	11,546		
				15,864	19,159	25,748	35,632		
			5,874	8,095	10,316	14,757			
			5,179	6,782	8,384	11,589			
			19,721	23,730	27,740	35,758			
		4,927	10,238	12,893	15,548				
		4,592	8,391	10,291	12,190				
		18,011	27,598	32,392	37,185				
	5,619	8,748	15,005						
	5,087	7,325	11,802						
	19,260	24,908	36,204						
5,542	9,183	12,823							
5,003	7,611	10,220							
19,122	25,694	32,267							
						6,674	12,150		
						5,805	9,737		
						21,166	31,050		

GP/S - PNEUMATIC SPRING RETURN - FAIL CLOSE

Actuator Size	MOP bar	MAWP bar	Position of stroke	Spring Torque Nm
GP-160C-535*/C3	7	12	**End**	**24,264**
			Mid	10,674
			Break	16,235
GP-160C-585*/C3	6	12	**End**	**24,301**
			Mid	10,687
			Break	16,253
GP-160C-635*/C3	5.5	12	**End**	**24,369**
			Mid	10,712
			Break	16,286
GP-160C-685*/C3	4	12	**End**	**24,328**
			Mid	10,774
			Break	16,266
GP-160C-735*/C3	4	12	**End**	**24,284**
			Mid	10,681
			Break	16,245
GP-160C-535*/C4	8.5	12	**End**	**31,295**
			Mid	13,744
			Break	20,888
GP-160C-585*/C4	7	12	**End**	**31,331**
			Mid	13,757
			Break	20,906
GP-160C-635*/C4	6	12	**End**	**31,399**
			Mid	13,781
			Break	20,939
GP-160C-685*/C4	5	12	**End**	**31,358**
			Mid	13,866
			Break	20,919
GP-160C-735*/C4	4	12	**End**	**31,315**
			Mid	13,850
			Break	20,897
GP-160C-785*/C4	4	12	**End**	**31,267**
			Mid	13,833
			Break	20,875
GP-200C-535*/C1	12	12	**End**	**37,813**
			Mid	17,522
			Break	27,245
GP-200C-585*/C1	10.5	12	**End**	**38,280**
			Mid	17,733
			Break	27,571
GP-200C-635*/C1	8.5	12	**End**	**38,366**
			Mid	17,764
			Break	27,612

CANTED

Pneumatic Stroke Torque (Nm) at Operating Pressure (bar)									
3.0	3.5	4.0	5.0	5.5	6.0	7.0	8.5	10.5	12.0
			3,335	5,556	7,777	12,218			
			3,321	4,929	6,536	9,752			
			15,139	19,148	23,157	31,175			
			7,699	10,354	13,010				
			6,544	8,451	10,357				
			23,016	27,809	32,603				
		6,209	12,466	15,595					
		5,492	9,973	12,214					
		20,326	31,621	37,269					
	6,644	10,285							
	5,820	8,425							
	21,112	27,684							
6,287	10,479	14,670							
5,549	8,555	11,561							
20,467	28,034	35,600							
						6,918	13,580		
						6,215	11,079		
						24,141	36,169		
				5,053	7,708	13,019			
				4,873	6,799	10,652			
				20,775	25,569	35,156			
			7,165	10,294	13,422				
			6,454	8,710	10,966				
			24,588	30,236	35,883				
	1,343	4,984	12,265						
	1,913	4,655	10,139						
	14,078	20,650	33,795						
	5,177	9,369							
	4,979	8,067							
	21,000	28,566							
4,500	9,282	14,063							
4,437	7,931	11,425							
19,777	28,409	37,040							
						7,353	15,809	27,083	35,503
						7,190	13,336	21,530	27,498
						31,482	46,833	67,302	82,503
					8,434	15,146	25,215	38,639	
					8,042	12,858	20,081	29,712	
					33,636	45,753	63,929	88,163	
			7,747	11,701	15,655	23,564	35,427		
			7,520	10,354	13,189	18,857	27,360		
			32,396	39,534	46,673	60,950	82,365		

GP/S - PNEUMATIC SPRING RETURN - FAIL CLOSE

Actuator Size	MOP bar	MAWP bar	Position of stroke	Spring Torque Nm
GP-200C-685*/C1	7	12	**End**	**38,314**
			Mid	17,745
			Break	27,587
GP-200C-735*/C1	7	12	**End**	**38,259**
			Mid	17,725
			Break	27,560
GP-200C-785*/C1	6	12	**End**	**38,199**
			Mid	17,704
			Break	27,531
GP-200C-835*/C1	5	12	**End**	**38,136**
			Mid	17,758
			Break	27,501
GP-200C-935*/C1	4	12	**End**	**37,997**
			Mid	17,632
			Break	27,433
GP-200C-937*/C1	4	12	**End**	**37,922**
			Mid	17,605
			Break	27,397
GP-200C-635*/C2	10.5	12	**End**	**50,168**
			Mid	23,874
			Break	37,538
GP-200C-685*/C2	8.5	12	**End**	**50,117**
			Mid	23,855
			Break	37,513
GP-200C-735*/C2	7	12	**End**	**50,061**
			Mid	23,834
			Break	37,486
GP-200C-785*/C2	6	12	**End**	**50,002**
			Mid	23,812
			Break	37,457
GP-200C-835*/C2	6	12	**End**	**49,938**
			Mid	23,789
			Break	37,426
GP-200C-935*/C2	4	12	**End**	**49,800**
			Mid	23,738
			Break	37,359
GP-200C-937*/C2	4	12	**End**	**49,725**
			Mid	23,710
			Break	37,322
GP-201C-935*/C3	7	12	**End**	**81,658**
			Mid	41,015
			Break	66,380

CANTED

Pneumatic Stroke Torque (Nm) at Operating Pressure (bar)									
3.0	3.5	4.0	5.0	5.5	6.0	7.0	8.5	10.5	12.0
			14,194	18,795	23,139	32,241			
			12,304	15,601	18,685	25,168			
			44,034	52,340	59,981	76,412			
		10,533	21,128	26,426	31,724	42,319			
		9,640	17,197	20,976	24,755	32,312			
		37,425	56,553	66,117	75,680	94,808			
	10,422	16,465	28,552	34,595	40,638				
	9,538	13,911	22,656	27,029	31,402				
	37,226	48,135	69,954	80,863	91,772				
	15,951	22,788	36,463						
	13,566	18,436	28,176						
	47,206	59,549	84,236						
19,459	28,032	36,605							
16,076	22,161	28,246							
53,538	69,015	84,491							
25,070	34,585	44,099							
20,090	27,328	34,566							
63,668	80,844	98,020							
						12,255	24,118	39,935	
						11,709	20,290	31,732	
						49,141	70,556	99,110	
					12,087	21,290	35,095		
					11,582	18,242	28,232		
					48,838	65,452	90,372		
			9,819	15,117	20,415	31,010			
			9,787	13,657	17,527	25,268			
			44,744	54,308	63,871	82,998			
			17,242	23,285	29,328				
			15,292	19,684	24,076				
			58,144	69,054	79,963				
		11,479	25,154	31,992	38,829				
		11,119	21,030	25,986	30,941				
		47,740	72,427	84,770	97,113				
	16,723	25,296							
	15,044	21,219							
	57,206	72,683							
13,760	23,275	32,790							
12,855	19,738	26,620							
51,859	69,035	86,211							
					26,521	43,667			
					25,020	37,535			
					102,714	133,667			

GP/S - PNEUMATIC SPRING RETURN - FAIL CLOSE

Actuator Size	MOP bar	MAWP bar	Position of stroke	Spring Torque Nm
GP-201C-937*/C3	6	12	**End**	**81,583**
			Mid	40,987
			Break	66,343
GP-201C-935*/C7	6	12	**End**	**64,178**
			Mid	34,566
			Break	57,877
GP-201C-937*/C7	6	12	**End**	**64,103**
			Mid	34,538
			Break	57,840
GP-270C-937*/C0	7	12	**End**	**108,301**
			Mid	61,673
			Break	105,850
GP-270C-940*/C0	6	12	**End**	**108,160**
			Mid	61,621
			Break	105,782
GP-270C-945*/C0	5.5	12	**End**	**107,925**
			Mid	61,534
			Break	105,667
GP-270C-937*/C4	7	12	**End**	**96,673**
			Mid	57,383
			Break	100,194
GP-270C-940*/C4	6	12	**End**	**96,532**
			Mid	57,331
			Break	100,125
GP-270C-945*/C4	5	12	**End**	**96,297**
			Mid	57,244
			Break	100,011

MOP = Maximum operating pressure
MAWP = Maximum allowable working pressure.

Max operating pressure is the pressure required to produce the maximum operating torques of the actuator.
Max allowable working pressure is the pressure applicable to a fully stroked actuator against the mechanical stoppers.

CANTED

Pneumatic Stroke Torque (Nm) at Operating Pressure (bar)									
3.0	3.5	4.0	5.0	5.5	6.0	7.0	8.5	10.5	12.0
				28,266	37,781				
				26,348	33,301				
				105,864	123,040				
				27,636	36,209				
				25,869	32,163				
				104,727	120,204				
			28,439	37,954	47,469				
			26,481	33,430	40,378				
			106,177	123,353	140,529				
						60,099			
						55,177			
						217,862			
				40,545	55,302				
				40,295	51,464				
				182,562	209,201				
			55,117	72,817					
			51,593	64,657					
			208,868	240,822					
					40,572	66,544			
					40,316	60,055			
					182,611	229,497			
				46,990	61,747				
				45,407	56,384				
				194,197	220,836				
			61,562						
			56,401						
			220,502						

GP/D - PNEUMATIC - DOUBLE ACTING

Actuator Size	MOP bar	MAWP bar	Position of stroke
GP-065S-180*/D1	12	12	**End** Mid Break
GP-065S-235*/D1	8.5	12	**End** Mid Break
GP-065S-280*/D1	6	12	**End** Mid Break
GP-085S-180*/D1	12	12	**End** Mid Break
GP-085S-235*/D1	12	12	**End** Mid Break
GP-085S-280*/D1	8.5	12	**End** Mid Break
GP-085S-335*/D1	6	12	**End** Mid Break
GP-100S-335*/D1	10.5	12	**End** Mid Break
GP-100S-385*/D1	8.5	12	**End** Mid Break
GP-100S-435*/D1	6	12	**End** Mid Break
GP-100S-485*/D1	5	12	**End** Mid Break
GP-130S-335*/D1	12	12	**End** Mid Break
GP-130S-385*/D1	10.5	12	**End** Mid Break
GP-130S-435*/D1	7	12	**End** Mid Break

SYMMETRICAL

Pneumatic Stroke Torque (Nm) at Operating Pressure (bar)									
3.0	**3.5**	**4.0**	**5.0**	**5.5**	**6.0**	**7.0**	**8.5**	**10.5**	**12.0**
691	809	927	1,163	1,281	1,399	1,635	1,989	2,461	2,815
396	464	531	667	734	802	937	1,140	1,440	1,614
657	770	882	1,106	1,219	1,331	1,555	1,892	2,341	2,677
1,197	1,402	1,606	2,015	2,219	2,424	2,832	3,466		
686	804	921	1,272	1,272	1,390	1,624	1,976		
1,121	1,312	1,503	1,886	2,077	2,268	2,651	3,224		
1,711	2,003	2,295	2,880	3,172	3,464				
981	1,149	1,316	1,651	1,819	1,986				
1,591	1,862	2,134	2,677	2,948	3,220				
914	1,070	1,226	1,538	1,694	1,851	2,163	2,631	3,256	3,724
524	614	703	882	972	1,061	1,240	1,509	1,867	2,135
870	1,018	1,167	1,464	1,612	1,760	2,057	2,503	3,096	3,542
1,584	1,854	2,125	2,665	2,936	3,206	3,747	4,558	5,640	6,451
908	1,063	1,218	1,528	1,683	1,838	2,148	2,628	3,234	3,699
1,483	1,736	1,989	2,495	2,748	3,001	3,507	4,266	5,278	6,036
2,264	2,650	3,037	3,810	4,196	4,583	5,355	6,515		
1,298	1,519	1,741	2,184	2,406	2,627	3,087	3,735		
2,105	2,464	2,823	3,541	3,901	4,260	4,978	6,056		
3,256	3,812	4,368	5,480	6,036	6,591				
1,867	2,186	2,504	3,142	3,460	3,779				
3,013	3,527	4,041	5,069	5,583	6,098				
3,862	4,521	5,180	6,498	7,158	7,817	9,135	11,113	13,750	
2,214	2,592	2,986	3,726	4,104	4,482	5,238	6,371	7,883	
3,585	4,197	4,809	6,032	6,644	7,256	8,480	10,315	12,762	
5,136	6,010	6,884	8,631	9,505	10,379	12,126	14,747		
2,945	3,446	3,947	4,949	5,450	5,951	6,952	8,455		
4,751	5,559	6,368	7,984	8,792	9,600	11,216	13,640		
6,580	7,696	8,811	11,042	12,158	13,273				
3,773	4,412	5,052	6,331	6,989	7,630				
6,086	7,118	8,149	10,213	11,244	12,276				
8,198	9,587	10,977	13,756						
4,700	5,497	6,293	7,887						
7,566	8,848	10,131	12,695						
5,077	5,944	6,811	8,544	9,411	10,277	12,011	14,611	18,078	20,678
2,927	3,408	3,905	4,899	5,396	5,892	6,886	8,377	10,365	11,856
4,714	5,518	6,322	7,931	8,736	9,540	11,149	13,562	16,779	19,193
6,753	7,902	9,051	11,348	12,497	13,646	15,943	19,389	23,984	
3,872	4,531	5,189	6,506	7,165	7,824	9,141	11,117	13,826	
6,247	7,309	8,372	10,497	11,559	12,622	14,746	17,934	22,183	
8,652	10,118	11,585	14,518	15,985	17,451	20,385			
4,960	5,801	6,642	8,324	9,165	10,006	11,687			
8,002	9,358	10,715	13,427	14,784	16,140	18,852			

GP/D - PNEUMATIC - DOUBLE ACTING

Actuator Size	MOP bar	MAWP bar	Position of stroke
GP-130S-485*/D1	6	12	**End** Mid Break
GP-130S-535*/D1	5.5	12	**End** Mid Break
GP-160S-385*/D1	12	1	**End** Mid Break
GP-160S-435*/D1	10.5	12	**End** Mid Break
GP-160S-485*/D1	8.5	12	**End** Mid Break
GP-160S-535*/D1	7	12	**End** Mid Break
GP-160S-585*/D1	6	12	**End** Mid Break
GP-200S-485*/D1	12	12	**End** Mid Break
GP-200S-535*/D1	12	12	**End** Mid Break
GP-200S-585*/D1	10.5	12	**End** Mid Break
GP-200S-635*/D1	8.5	12	**End** Mid Break
GP-200S-685*/D1	7	12	**End** Mid Break
GP-200S-735*/D1	7	12	**End** Mid Break
GP-200S-785*/D1	6	12	**End** Mid Break

SYMMETRICAL

Pneumatic Stroke Torque (Nm) at Operating Pressure (bar)									
3.0	**3.5**	**4.0**	**5.0**	**5.5**	**6.0**	**7.0**	**8.5**	**10.5**	**12.0**
10,778	12,605	14,432	18,086	19,913	21,740				
6,179	7,227	8,274	10,370	11,417	12,465				
9,947	11,633	13,319	16,691	18,377	20,063				
13,180	15,407	17,633	22,087	24,313					
7,549	8,824	10,099	12,649	13,924					
12,145	14,197	16,248	20,351	22,403					
8,280	9,806	11,231	14,082	15,508	16,934	19,785	24,062	29,764	34,041
4,805	5,622	6,439	8,074	8,891	9,709	11,405	13,796	17,065	19,517
7,775	9,097	10,420	13,064	14,386	15,709	18,353	22,320	27,609	31,576
10,768	12,593	14,419	18,069	19,895	21,720	25,371	30,847	38,148	
6,174	7,220	8,367	10,360	11,441	12,453	14,546	17,686	21,872	
9,959	11,647	13,335	16,712	18,400	20,088	23,464	28,528	38,563	
13,414	15,688	17,962	22,510	24,784	27,058	31,606	38,427		
7,691	8,995	10,298	12,906	14,210	15,513	18,121	22,032		
12,381	14,479	16,577	20,774	22,872	24,971	29,168	35,463		
16,404	19,175	21,946	27,489	30,260	33,031	38,574			
9,395	10,982	12,569	15,743	17,330	18,917	22,091			
15,116	17,669	20,223	25,330	27,883	30,436	35,543			
19,676	22,988	26,301	32,926	36,239	39,552				
11,271	13,169	15,066	18,861	20,759	22,656				
18,134	21,187	24,240	30,346	33,399	36,452				
16,838	19,692	22,547	28,256	31,110	33,965	39,674	48,238	59,656	68,220
9,706	11,290	12,927	16,288	17,837	19,579	22,747	27,657	34,204	39,113
15,648	18,300	20,952	26,256	28,908	31,560	36,865	44,821	55,430	63,386
20,616	24,100	27,583	34,549	38,032	41,515	48,481	58,931	72,863	83,312
11,820	13,817	15,814	19,808	21,805	21,904	27,796	33,787	41,776	47,767
19,105	22,332	25,559	32,013	35,240	38,468	49,102	50,603	67,512	77,193
24,786	28,960	33,133	41,480	45,653	49,826	58,173	70,692	87,385	
14,211	16,604	18,997	23,782	26,175	28,567	33,353	40,627	50,374	
22,920	26,778	30,637	38,354	42,212	46,071	53,788	65,364	80,798	
29,351	34,276	39,201	49,052	53,977	58,902	68,752	83,527		
16,828	19,652	22,176	28,123	30,947	33,771	39,418	47,925		
27,096	31,642	36,189	45,281	49,828	54,374	63,467	77,105		
34,199	39,938	45,676	57,153	62,891	68,630	80,107			
19,598	22,886	26,175	32,751	36,039	39,328	45,904			
31,531	36,822	42,112	52,693	57,983	63,274	73,855			
39,414	46,028	52,641	65,868	72,481	79,095	92,322			
22,563	26,349	30,135	37,707	41,493	45,278	52,850			
36,302	42,393	48,484	60,666	66,757	72,848	85,030			
44,997	52,547	60,097	75,197	82,747	90,297				
25,738	30,056	34,375	43,011	47,330	51,648				
41,409	48,357	55,305	69,201	76,149	83,096				

GP/D - PNEUMATIC - DOUBLE ACTING

Actuator Size	MOP bar	MAWP bar	Position of stroke
GP-200S-835*/D1	5.5	12	**End** Mid Break
GP-201S-735*/D1	10.5	11	**End** Mid Break
GP-201S-785*/D1	8.5	12	**End** Mid Break
GP-201S-835*/D1	8.5	12	**End** Mid Break
GP-201S-935*/D1	6	12	**End** Mid Break
GP-270S-735*/D1	12	12	**End** Mid Break
GP-270S-785*/D1	12	12	**End** Mid Break
GP-270S-835*/D1	10.5	12	**End** Mid Break
GP-270S-935*/D1	8.5	12	**End** Mid Break
GP-270S-937*/D1	7	12	**End** Mid Break
GP-270S-940*/D1	7	12	**End** Mid Break
GP-270S-945*/D1	5.5	12	**End** Mid Break

MOP = Maximum operating pressure
MAWP = Maximum allowable working pressure.

Max operating pressure is the pressure required to produce the maximum operating torques of the actuator.
Max allowable working pressure is the pressure applicable to a fully stroked actuator against the mechanical stoppers.

SYMMETRICAL

Pneumatic Stroke Torque (Nm) at Operating Pressure (bar)									
3.0	**3.5**	**4.0**	**5.0**	**5.5**	**6.0**	**7.0**	**8.5**	**10.5**	**12.0**
50,946	59,495	68,043	85,140	93,688					
29,121	34,007	38,893	48,665	53,551					
46,852	54,713	62,575	78,297	86,158					
39,414	46,028	52,641	65,868	72,481	79,095	92,322	112,162	138,616	
22,563	26,349	30,135	37,707	41,493	45,278	52,850	64,232	79,351	
36,302	42,393	48,484	60,666	66,757	72,848	85,030	103,303	127,667	
44,997	52,547	60,097	75,197	82,747	90,297	105,397	128,047		
25,738	30,056	34,375	43,011	47,330	51,648	60,285	73,240		
41,409	48,357	55,305	69,201	76,149	83,096	96,992	117,836		
50,946	59,495	68,043	85,140	93,688	102,236	119,333	144,978		
29,121	34,007	38,893	48,665	53,551	58,437	68,209	82,867		
46,852	54,713	62,575	78,297	86,158	94,019	109,741	133,325		
63,947	74,677	85,407	106,866	117,596	128,325	149,713			
36,514	42,640	48,767	61,019	67,146	73,272	85,484			
58,746	68,603	78,460	98,174	108,030	117,887	137,535			
53,590	62,582	71,574	89,558	98,551	107,543	125,527	152,504	188,472	215,449
30,725	35,881	41,037	51,348	56,503	61,659	71,970	87,437	108,060	123,802
49,547	57,860	66,173	82,799	91,112	99,426	116,052	140,991	174,244	199,184
61,209	71,479	81,750	102,291	112,561	122,832	143,373	174,185	215,267	246,078
35,094	40,982	46,871	58,648	64,536	70,425	82,202	99,868	123,422	141,087
56,517	65,999	75,482	94,448	103,930	113,413	132,378	160,826	198,757	227,205
69,329	80,962	92,595	115,861	127,494	139,127	162,393	197,292	243,824	
39,745	46,414	53,083	66,420	73,088	79,757	93,094	113,100	139,775	
63,946	74,675	85,404	106,862	117,591	128,321	149,779	181,966	224,883	
87,073	101,683	116,293	145,514	160,124	174,734	203,955	247,785		
49,835	58,197	66,558	83,281	91,643	100,005	116,728	141,813		
80,179	93,632	107,085	133,991	147,444	160,896	187,802	228,161		
96,697	112,922	129,147	161,597	177,822	194,047	226,497			
55,308	64,587	73,867	92,427	101,706	110,986	129,546			
88,984	103,914	118,844	148,704	163,635	178,565	208,425			
109,958	128,407	146,857	183,757	202,207	220,657	257,557			
62,848	74,001	83,970	105,028	115,573	126,117	147,207			
101,115	118,081	135,047	168,978	185,944	202,909	236,841			
132,012	154,163	176,313	220,614	242,764					
75,389	88,038	100,687	125,985	138,635					
121,293	141,644	161,995	202,697	223,048					

GP/D - PNEUMATIC - DOUBLE ACTING

Actuator Size	MOP bar	MAWP bar	Position of stroke
GP-065C-180*/D1	10.5	12	**End** Mid Break
GP-065C-235*/D1	6	12	**End** Mid Break
GP-065C-280*/D1	4	12	**End** Mid Break
GP-085C-180*/D1	12	12	**End** Mid Break
GP-085C-235*/D1	7	12	**End** Mid Break
GP-085C-280*/D1	5	12	**End** Mid Break
GP-085C-335*/D1	4	12	**End** Mid Break
GP-100C-335*/D1	7	12	**End** Mid Break
GP-100C-385*/D1	5	12	**End** Mid Break
GP-100C-435*/D1	4	12	**End** Mid Break
GP-100C-485*/D1	3	12	**End** Mid Break
GP-130C-335*/D1	8.5	12	**End** Mid Break
GP-130C-385*/D1	6	12	**End** Mid Break
GP-130C-435*/D1	5	12	**End** Mid Break

CANTED

Pneumatic Stroke Torque (Nm) at Operating Pressure (bar)									
3.0	3.5	4.0	5.0	5.5	6.0	7.0	8.5	10.5	12.0
539	631	723	907	999	1,091	1,275	1,551	1,919	
393	460	527	661	728	795	929	1,130	1,398	
1,032	1,209	1,385	1,737	1,913	2,089	2,442	2,970	3,675	
930	1,088	1,247	1,565	1,723	1,882				
677	793	909	1,140	1,255	1,371				
1,760	2,060	2,360	2,961	3,261	3,561				
1,327	1,553	1,779							
1,131	1,131	1,296							
2,498	2,924	3,351							
713	835	956	1,200	1,322	1,443	1,687	2,052	2,539	2,904
519	608	697	874	963	1,052	1,229	1,495	1,850	2,116
1,366	1,599	1,832	2,298	2,531	2,764	3,230	3,929	4,862	5,561
1,230	1,440	1,650	2,070	2,280	2,490	2,910			
896	1,049	1,202	1,508	1,661	1,814	2,134			
2,328	2,725	3,122	3,917	4,314	4,711	5,506			
1,755	2,054	2,354	2,953						
1,278	1,497	1,715	2,151						
3,305	3,869	4,433	5,560						
2,513	2,942	3,371							
1,831	2,144	2,456							
4,731	5,538	6,345							
2,981	3,489	3,998	5,016	5,525	6,033	7,051			
2,171	2,542	2,913	3,654	4,025	4,395	5,137			
5,629	6,590	7,551	9,472	10,432	11,393	13,314			
3,965	4,639	5,313	6,662						
2,888	3,379	3,871	4,853						
7,460	8,729	9,998	12,536						
5,079	5,940	6,801							
3,700	4,327	4,954							
9,556	11,176	12,796							
6,327									
4,609									
11,880									
3,919	4,588	5,257	6,595	7,264	7,933	9,271	11,278		
2,855	3,342	3,829	4,804	5,291	5,779	6,753	8,215		
7,401	8,664	9,927	12,453	13,716	14,979	17,505	21,294		
5,212	6,099	6,986	8,759	9,646	10,533				
3,797	4,448	5,089	6,381	7,027	7,724				
9,809	11,477	13,145	16,481	18,150	19,818				
6,678	7,810	8,942	11,206						
4,865	5,689	6,514	8,163						
12,565	14,694	16,824	21,083						

GP/D - PNEUMATIC - DOUBLE ACTING

Actuator Size	MOP bar	MAWP bar	Position of stroke
GP-130C-485*/D1	4	12	**End** Mid Break
GP-130C-535*/D1	3.5	12	**End** Mid Break
GP-160C-385*/D1	8.5	12	**End** Mid Break
GP-160C-435*/D1	7	12	**End** Mid Break
GP-160C-485*/D1	5.5	12	**End** Mid Break
GP-160C-535*/D1	4	12	**End** Mid Break
GP-160C-585*/D1	3.5	12	**End** Mid Break
GP-200C-485*/D1	10.5	12	**End** Mid Break
GP-200C-535*/D1	8.5	12	**End** Mid Break
GP-200C-585*/D1	7	12	**End** Mid Break
GP-200C-635*/D1	6	12	**End** Mid Break
GP-200C-685*/D1	5.5	12	**End** Mid Break
GP-200C-735*/D1	4	12	**End** Mid Break
GP-200C-785*/D1	4	12	**End** Mid Break

CANTED

Pneumatic Stroke Torque (Nm) at Operating Pressure (bar)									
3.0	3.5	4.0	5.0	5.5	6.0	7.0	8.5	10.5	12.0
8,319	9,729	11,139							
6,060	7,088	8,115							
15,619	18,266	20,913							
10,173	11,892								
7,411	8,663								
19,070	22,291								
6,468	7,569	8,669	10,870	11,970	13,070	15,271	18,572		
4,712	5,514	6,315	7,918	8,720	9,521	11,125	13,529		
12,208	14,284	16,360	20,513	22,589	24,665	28,817	35,046		
8,311	9,720	11,129	13,947	15,356	16,765	19,833			
6,054	7,081	8,107	10,160	11,186	12,213	14,583			
15,638	18,288	20,939	26,240	28,890	31,541	36,482			
10,354	12,109	13,864	17,374	19,130					
7,543	8,821	10,100	12,657	13,935					
19,439	22,734	26,029	32,618	35,913					
12,662	14,801	16,940							
9,224	10,782	12,340							
23,734	27,743	31,752							
15,187	17,744								
11,063	12,926								
28,474	33,267								
12,996	15,200	17,403	21,810	24,013	26,216	30,623	37,233	46,046	
9,467	11,072	12,678	15,888	17,493	19,098	22,308	27,123	33,543	
24,569	28,733	32,898	41,226	45,390	49,555	57,883	70,376	87,033	
15,913	18,601	21,290	26,667	29,355	32,044	37,421	45,486		
11,592	13,551	15,509	19,426	21,385	23,343	27,260	33,136		
29,997	35,064	40,132	50,266	55,333	60,400	70,534	85,736		
19,132	22,353	25,574	32,016	35,237	38,459	44,901			
13,937	16,283	18,630	23,323	25,670	28,016	32,709			
35,987	42,046	48,104	60,221	66,280	72,338	84,455			
22,655	26,457	30,258	37,861	41,662	45,464				
16,504	19,273	22,042	27,581	30,350	33,119				
42,545	49,683	56,822	71,098	78,237	85,375				
26,397	30,826	35,255	44,114	48,543					
19,230	22,598	25,683	32,136	35,363					
49,509	57,815	66,122	82,736	91,043					
30,422	35,527	40,631							
22,162	25,880	29,599							
57,000	66,564	76,127							
34,731	40,559	46,386							
25,301	29,546	33,791							
65,019	75,928	86,837							

GP/D - PNEUMATIC - DOUBLE ACTING

Actuator Size	MOP bar	MAWP bar	Position of stroke
GP-200C-835*/D1	3.5	12	**End** Mid Break
GP-201C-735*/D1	4	12	**End** Mid Break
GP-201C-785*/D1	4	12	**End** Mid Break
GP-201C-835*/D1	3.5	12	**End** Mid Break
GP-201C-935*/D1	4	12	**End** Mid Break
GP-270C-735*/D1	9	11	**End** Mid Break
GP-270C-785*/D1	7.5	11	**End** Mid Break
GP-270C-835*/D1	7	11	**End** Mid Break
GP-270C-935*/D1	5.5	11	**End** Mid Break
GP-270C-937*/D1	5	11	**End** Mid Break
GP-270C-940*/D1	4	11	**End** Mid Break
GP-270C-945*/D1	3.5	11	**End** Mid Break

MOP = Maximum operating pressure
MAWP = Maximum allowable working pressure.

Max operating pressure is the pressure required to produce the maximum operating torques of the actuator.
Max allowable working pressure is the pressure applicable to a fully stroked actuator against the mechanical stoppers.

CANTED

Pneumatic Stroke Torque (Nm) at Operating Pressure (bar)									
3.0	3.5	4.0	5.0	5.5	6.0	7.0	8.5	10.5	12.0
39,323	45,921								
28,646	33,453								
73,565	85,908								
30,422	35,527	40,631	50,789	55,868	60,947	71,104			
22,162	25,880	29,599	36,999	40,699	44,399	51,798			
57,000	66,564	76,127	95,159	104,675	114,191	133,223			
34,731	40,559	46,386	57,983	63,781	69,579				
25,301	29,546	33,791	42,239	46,463	50,687				
65,019	75,928	86,837	108,546	119,401	130,256				
39,323	45,921	52,481	65,601	72,162	78,722				
28,646	33,453	38,232	47,790	52,569	57,348				
73,565	85,908	98,181	122,726	134,998	147,271				
49,358	57,640	65,962							
36,196	42,269	48,342							
92,241	107,717	123,194							
41,367	48,308	55,248	69,130	76,070	83,011	96,892	117,714		
30,417	35,520	40,624	50,831	55,934	61,038	71,244	86,555		
77,795	90,848	103,901	130,007	143,060	156,113	182,219	221,378		
47,187	55,104	63,021	78,855	86,772	94,690	110,524			
34,696	40,517	46,339	57,982	63,803	69,625	81,268			
88,740	103,629	118,518	148,297	163,186	178,075	207,854			
53,388	62,346	71,304	89,219	98,177	107,135	125,051			
39,256	45,843	52,429	65,603	72,189	78,776	91,949			
100,404	117,250	134,097	167,790	184,636	201,482	235,175			
66,942	78,174	89,406	111,870	123,102					
49,222	57,481	65,740	82,257	90,516					
125,893	147,016	168,139	210,386	231,509					
73,485	85,815	98,144	122,804						
54,033	63,099	72,165	90,297						
138,199	161,387	184,575	230,950						
85,468	99,808	114,149							
62,844	73,389	83,933							
158,766	185,405	212,044							
101,268	118,259								
74,462	86,955								
190,448	222,402								

RC200

Pneumatic Actuators
DA – Double acting

TORQUE Nm

4 bar

Type	0°	50°	90°
RC210-DA	25	12	18
RC220-DA	51	25	36
RC230-DA	96	47	69
RC240-DA	195	97	140
RC250-DA	300	150	215
RC260-DA	610	300	440
RC270-DA	1260	630	910
RC280-DA	2540	1270	1830

TORQUE Nm

6 bar

Type	0°	50°	90°
RC210-DA	38	19	27
RC220-DA	76	38	54
RC230-DA	145	72	105
RC240-DA	290	145	210
RC250-DA	450	225	320
RC260-DA	910	460	650
RC270-DA	1890	940	1360
RC280-DA	3800	1900	2740

5,5 bar

Type	0°	50°	90°
RC210-DA	34	17	25
RC220-DA	70	35	50
RC230-DA	130	66	95
RC240-DA	270	135	190
RC250-DA	410	210	300
RC260-DA	840	420	600
RC270-DA	1730	860	1250
RC280-DA	3500	1750	2500

7 bar

Type	0°	50°	90°
RC210-DA	44	22	32
RC220-DA	88	44	63
RC230-DA	165	83	120
RC240-DA	340	170	240
RC250-DA	530	260	380
RC260-DA	1070	530	770
RC270-DA	2200	1100	1590
RC280-DA	4450	2220	3190

AIR CONSUMPTION RC200-DA

Free air at 6 bar air pressure

Type	Anticlockwise rotation dm^3	Clockwise rotation dm^3
RC210-DA	0,6	1,1
RC220-DA	1,1	1,3
RC230-DA	2,2	4,0
RC240-DA	4,4	5
RC250-DA	6,9	13
RC260-DA	13,8	16
RC270-DA	33	54
RC280-DA	66	67

OPERATION TIME RC200-DA

At 6 bar air pressure

Type	Anticlockwise rotation sec.	Clockwise rotation sec.
RC210	<0,25	<0,5
RC220	<0,25	<0,3
RC230	<1	<0,25
RC240	<1	<1
RC250	<1,5	<2,5
RC260	<2	<2,5
RC270	<4	<6
RC280	<5	<5

The times relate to full air flow and may increase depending on solenoid valves and the dimensions of connecting pipes.

TECHNICAL DATA

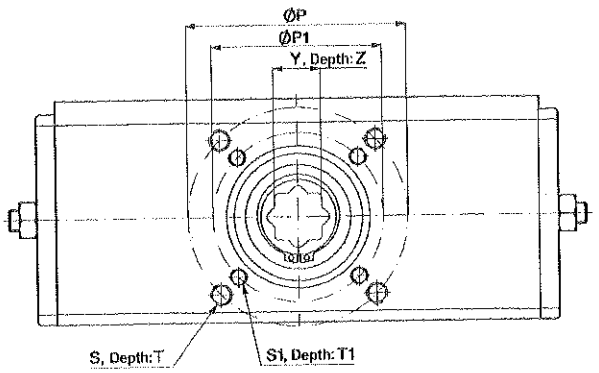

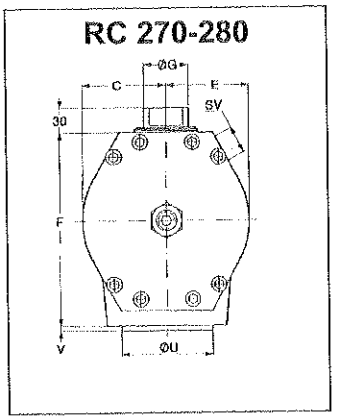

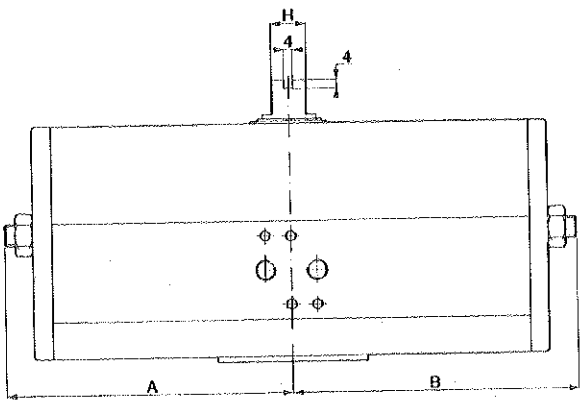

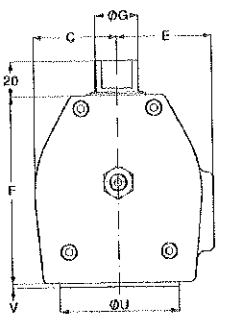

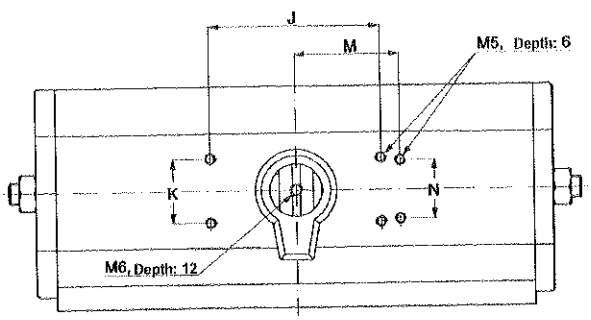

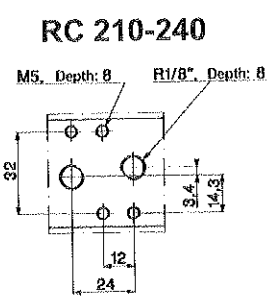

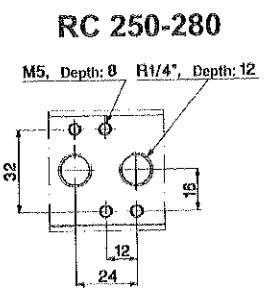

Technical data:
Max. working pressure 10 bar. Operating medium: air or inert gases. On request also low pressure hydraulics.
Ambient temperature: –20 to +80 °C. Actuators for other temperature ranges can be delivered on request.

MEASUREMENTS RC200-DA Standard design

Type	N.Fl	A	B	C	E	F	G	H	J	K	M	N	Fl	P	S	T	Fl	P1	S1	T1	U	V	Y**	Z	Weight kg
RC210-DA	F05	45	98	32	41	75	16	10	35,4	35,4	40	30	F05	50	M6	11	–	–	–	–	35	2	14	19	1,2
RC220-DA	F05	98	98										F05	50	M6	11					35		14	19	1,6
RC230-DA	F07	65	135	49	55	110	25	16					F10*	102*	M10*	17*	F07	70	M8	14	55		17	30	3,5
RC240-DA	F10	135	135						80	30	–	–	F10	102	M10	17	F07*	70*	M8*	14*	70	3	22	30	4,9
RC250-DA	F10	90	190	69	75	155	35	22					F12*	125*	M12*	21*	F10	102	M10	17	70			37	9,4
RC260-DA	F12	190	190										F12	125	M12	21	F10*	102*	M10*	17*	85		27	37	12,5
RC270-DA	F14	145	300	110	110	248	60	40	130				F14	140	M16	25	–	–	–	–	100	4	36	64	32,0
RC280-DA	F16	300	300										F16	165	M20	32	F12*	125*	M12*	25*	130	5	46	64	42,0

N.Fl = Nominal ISO/DIN flange. I.e. mounting hole circle to valve, guide ring diameter U and measure Y follow the same standard flange.
SV = Connection to solenoid valve on RC270–280.
* = Extra mounting holes on all RC230–260 and 280 for alternative ISO/DIN hole pattern.
** = Tolerance H9. The hole is octagonal and adapts to valve stems with squares both in 90° and 45° direction.
RC270 also has the following hole pattern on the bottom side: CC 170 x 110 mm placed alongside the actuator, 4 pcs M16, depth 25 mm.
RC280 also has the following hole pattern on the bottom side: CC 234,7 x 97,2 mm, 4 pcs M16, depth 25 mm, which corresponds to 4 pcs of 8 pcs F25-holes.
Regarding special designs: Please ask for a special brochure from Remote Control.

Pneumatic Actuators SR – with spring return

TORQUE Nm

4,1 bar/60 psi*

	Air opens →			Spring closes →		
Type	0°	60°	90°	90°	30°	0°
RC210-SR	14	6	7,5	12	6	8,5
RC220-SR	29	12	15	25	12	17
RC230-SR	54	23	29	47	23	33
RC240-SR	110	47	58	96	47	66
RC250-SR	170	74	90	150	74	100
RC260-SR	345	150	180	305	150	210
RC270-SR	710	310	380	630	310	430
RC280-SR	1430	620	760	1270	620	870

Air 5,5 bar/80 psi - Springs for 87 psi

	Air opens →			Spring closes →		
Type	0°	60°	90°	90°	30°	0°
RC210-SR	18	7	8,5	18	9	12
RC220-SR	36	15	18	37	18	25
RC230-SR	68	28	33	69	33	47
RC240-SR	138	56	67	140	68	96
RC250-SR	210	88	105	215	105	150
RC260-SR	440	180	210	440	215	305
RC270-SR	910	370	440	910	440	620
RC280-SR	1820	740	880	1840	900	1260

* Springs adapted to air pressures above

TORQUE Nm

6 bar/87 psi*

	Air opens →			Spring closes →		
Type	0°	60°	90°	90°	30°	0°
RC210-SR	20	9	11	18	9	12
RC220-SR	41	18	22	37	18	25
RC230-SR	78	33	41	69	33	47
RC240-SR	158	68	84	140	68	96
RC250-SR	245	105	130	215	105	150
RC260-SR	500	215	265	440	215	305
RC270-SR	1030	440	550	910	440	620
RC280-SR	2080	900	1110	1840	900	1260

7 bar/100 psi*

	Air opens →			Spring closes →		
Type	0°	60°	90°	90°	30°	0°
RC210-SR	24	10	13	21	10	14
RC220-SR	48	21	26	43	21	29
RC230-SR	92	39	48	81	39	55
RC240-SR	185	80	98	163	80	115
RC250-SR	290	125	155	255	125	175
RC260-SR	580	250	310	515	250	350
RC270-SR	1210	520	640	1060	520	720
RC280-SR	2430	1050	1290	2150	1050	1470

AIR CONSUMPTION RC200-SR

Free air at 6 bar air pressure

Type	dm^3
RC210-SR	1,1
RC220-SR	1,3
RC230-SR	4,0
RC240-SR	5
RC250-SR	13
RC260-SR	16
RC270-SR	54
RC280-SR	67

OPERATION TIME RC200-SR

At 6 bar air pressure

Type	Anticlockwise and clockwise rotation sec.
RC210	<0,5
RC220	<0,3
RC230	<0,25
RC240	<1
RC250	<2,5
RC260	<2,5
RC270	<6
RC280	<5

The times relate to full air flow and may increase depending on solenoid valves and the dimensions of connecting pipes.

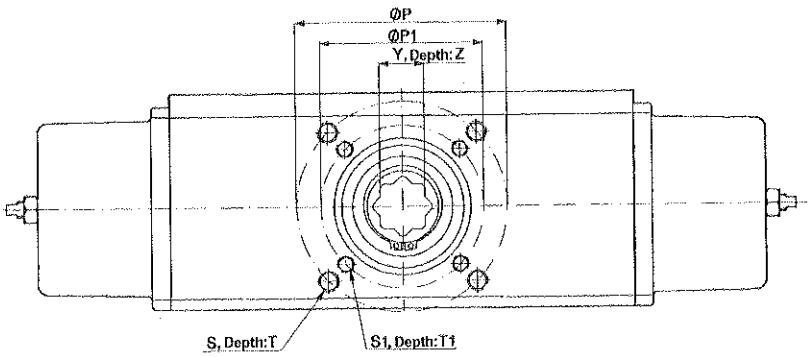

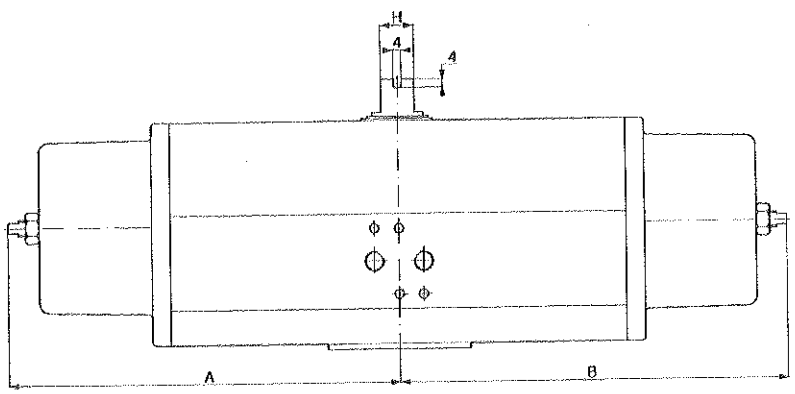

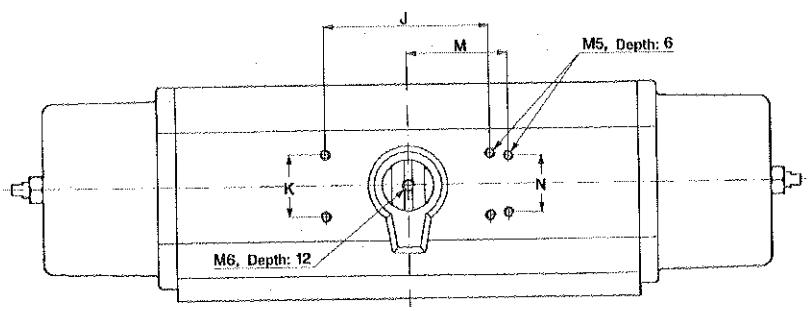

RC 270-280

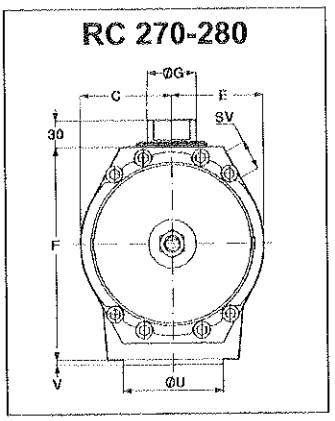

RC 210-260

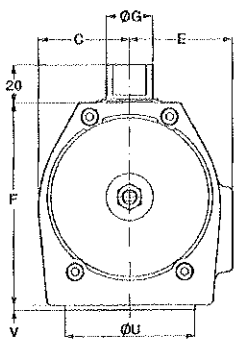

RC 210-240

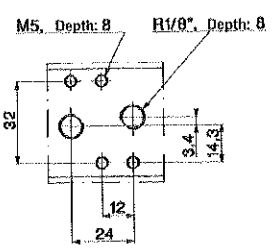

RC 250-280

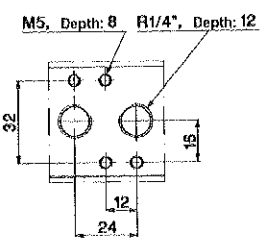

Technical data:
Max. working pressure 10 bar. Operating medium: air or inert gases. On request also low pressure hydraulics.
Ambient temperature: –20 to +80 °C. Actuators for other temperature ranges can be delivered on request.

MEASUREMENTS RC200-SR Standard design

Type	N.Fl	A	B	C	E	F	G	H	J	K	M	N	Fl	P	S	T	Fl	P1	S1	T1	U	V	Y**	Z	Weight kg
RC210-SR	F05	45	150	32	41	75	16	10	35,4	35,4	40	30	F05	50	M6	11	–	–	–	–	35	2	14	19	1,5
RC220-SR	F05	150	150										F05	50	M6	11					35		14	19	2,2
RC230-SR	F07	65	200	49	56	110	25	16					F10*	102*	M10*	17*	F07	70	M8	14	55		17	30	4,2
RC240-SR	F10	200	200						80	30	–	–	F10	102	M10	17	F07*	70*	M8*	14*	70	3	22	30	7,0
RC250-SR	F10	90	285	69	75	155	35	22					F12*	125*	M12*	21*	F10	102	M10	17	70			37	12,4
RC260-SR	F12	285	285										F12	125	M12	21	F10*	102*	M10*	17*	85		27	37	18,5
RC270-SR	F14	145	510	110	110	248	60	40	130				F14	140	M16	25	-	-	-	-	100	4	36	64	45,0
RC280-SR	F16	510	510										F16	165	M20	32	F12*	125*	M12*	25*	130	5	46	64	68,0

N.Fl = Nominal ISO/DIN flange. I.e. mounting hole circle to valve, guide ring diameter U and measure Y follow the same standard flange.
SV = Connection to solenoid valve on RC270–280.
* = Extra mounting holes on all RC230–260 and 280 for alternative ISO/DIN hole pattern.
** = Tolerance H9. The hole is octagonal and adapts to valve stems with squares both in 90° and 45° direction.
RC270 also has the following hole pattern on the bottom side: CC 170 x 110 mm placed alongside the actuator, 4 pcs M16, depth 25 mm.
RC280 also has the following hole pattern on the bottom side: CC 234,7 x 97,2 mm, 4 pcs M16, depth 25 mm, which corresponds to 4 pcs of 8 pcs F25-holes.
Regarding special designs: Please ask for a special brochure from Remote Control.

We reserve our right for modifications caused by technical development

Ref No 851 / Art No 980 851

Electric or Pneumatic Limit Switch
Type 4746

Application

Limit switch with inductive, electric or pneumatic limit switches for attachment to pneumatic or electric control valves, to Type 4763 Electropneumatic Positioners or Type 4765 Pneumatic Positioners

For rated travels from 7.5 to 150 mm

The limit switches supply a signal when an adjusted limit value is exceeded in either direction. This signal is suitable for initiating visual or audible alarms as well as pilot valves or other switching units. Moreover, the limit switches can be connected to central control or alarm systems.

The limit switches are optionally available with

- Two inductive limit switches
- Two electric limit switches or
- Two pneumatic limit switches

The limit switches can be overridden. They can optionally be used as break (normally closed) or make (normally opened) contacts. The metal tag is outside the inductive field for the break contact and inside the inductive field for the make contact.

Also available are versions

- For use in hazardous areas in type of protection "Intrinsic Safety" Ⓔx II 2 G EEx ia IIC T6 or Ⓔx II 3 G EEx nA II T6 for Zone 2
- Designed according to Canadian or US explosion protection certifications

Further features include

- Excellent switching accuracy
- No mutual influencing of the incorporated limit switches
- Hysteresis (dead band) dependent on effective lever length

Attachment to control valves with cast yokes or rod-type yokes according to IEC 60534-6-1 as well as to Type 4763 Electropneumatic Positioners or Type 4765 Pneumatic Positioners

Versions

Type 4746-x2 (Fig. 1) · Inductive limit switch with frictionless limit value sensor using metal tags and proximity switches (according to EN 60 947-5-6)

On request with proximity switches with integral output amplifier designed as three-wire switch (no transistor relay)

Type 4746-x3 · Electric limit switch with electric double-throw switch with friction snap-action contacts

Type 4746-04 · Pneumatic limit switch with incorporated pneumatic switches and subsequent pneumatic microswitches Supply: 1.4 bar (20 psi), output 0 or 1.4 bar (20 psi)

Fig. 1 · Type 4746-x2 Inductive Limit Switch

Versions for hazardous areas

4746-1 · Limit switch with contact circuit in type of protection "Intrinsic Safety" Ⓔx II 2 G EEx ia IIC T6

Type 4746-8 · Limit switch in type of protection "Non-sparking" Ⓔx II 3 G EEx nA II T6 for Zone 2

Versions with Canadian or US explosion protection certifications are available.
A summary of the approved explosion protection certificates can be found on page 5.
For information on the selection and application of positioners and limit switches, refer to Information Sheet T 8350 EN.

Principle of operation (Figs. 2 to 4)

The valve travel is transmitted either directly via the plate (20) onto the pin (1.1) and the lever (1) of the limit switch or, when the limit switch module is attached to a positioner, via a coupling pin. In this case, the linear valve travel is converted into a rotary motion via the shaft (2).

All limit switches have a small hysteresis which depends on the lever length L (see "Technical data"). Due to this, unnecessary contact changeover is avoided and signal processing is facilitated even when the valve stem position is within the limit signal range.

Type 4746-x2 Inductive Limit Switch (Fig. 2)

In these switches, the shaft (2) is provided with two switch cases (3) containing adjustable metal tags (4.1) for frictionless operation of the proximity switches (5). The proximity switches grow highly resistive when the metal tag is within the inductive field, whereas they become low-ohmic (lowly resistive) when the metal tag is outside the field. The switching function and the limit value are steplessly adjustable using the adjustment screw (3.1).

For operation of the standard inductive limit switches (two-wire according to EN 60 947-5-6), appropriate transistor relays must be connected to the output circuit. The three-wire version comprising the Type SB 3.5-E2 proximity switch includes an integrated output amplifier and does not require a transistor relay.

Type 4746-x3 Electric Limit Switch (Fig. 3)

In these switches, the shaft (2) is provided with two switch cases (3) containing adjustable cam discs (4.2). Each cam disc actuates an electric double-throw switch (7) by means of the roller (6.1) mounted to the switch lever (6). The switching function and the limit value are continuously adjustable using the adjustment screw (3.1).

Type 4746-04 Pneumatic Limit Switch (Fig. 4)

In these devices, the shaft (2) is provided with two switch cases (3) containing adjustable cam discs (4.2). Inside the switch (8), each cam disc actuates a nozzle-flapper system whose cascade pressure (p_{k1} or p_{k2}) is used to reverse the pneumatic microswitches (9).

When the cam disc (4.2) with its cam operates the switch lever (6) via the roller (6.1), the nozzle in the switch is opened and the available supply pressure p_z is fed from the microswitch to output A_1 or A_2 respectively. This means that input 5 is connected to output 3 and $p_{a1} = p_z$ or $p_{a2} = p_z$. As soon as the cam releases the switch lever (6), the nozzle (8.1) in the pneumatic switch (8) is closed. The microswitch changes over and the available air supply is shut off; i.e. $p_{a1} = 0$ or $p_{a2} = 0$. The switching function and the limit value are continuously adjustable using the adjustment screw (3.1).

The limit switch requires different levers (1) depending on the travel range of the valve used:

Lever I (157 mm) for travels up to max. 60 mm
Lever II (210 mm) for travels exceeding 60 mm
Whenever the limit switch is attached to positioners, a special lever, which is independent of the valve travel, needs to be used.

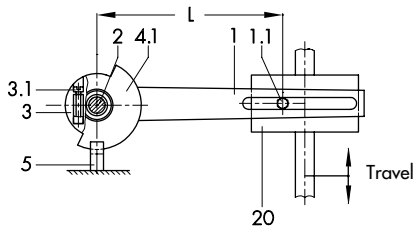

Fig. 2 · Functional diagram of the inductive limit switch

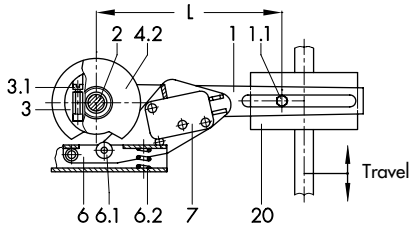

Fig. 3 · Functional diagram of the electric limit switch

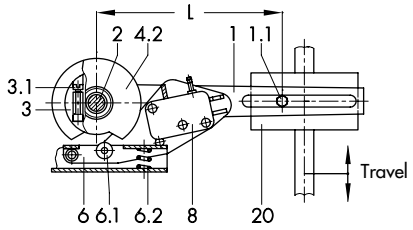

Fig. 4.1 · Functional diagram of the switching mechanism

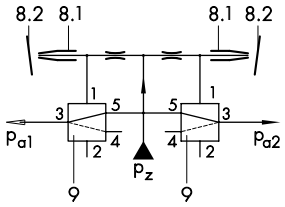

Fig. 4.2 · Functional diagram of the switching function

Fig. 4 · Pneumatic limit switch

Legend to Figs. 2 to 4

1 Lever for valve travel	6.1 Roller
1.1 Pin	6.2 Spring
2 Shaft	7 Electric switch
3 Switch case	8 Pneumatic switch
3.1 Adjustment screw	8.1 Nozzle (in switch)
4.1 Metal tag	8.2 Flapper (in switch)
4.2 Cam disc	9 Pneumatic microswitch
5 Proximity switch of the valve	20 Plate, attached to either the actuator or plug stem
6 Switch lever	

Table 1 · Technical data · All pressures stated in bar (gauge)

Inductive Limit Switch	**Type 4746-x2**		**Type 4746-0281**
Control circuit	Switching amplifier acc. to EN 60 947-5-6		Three-wire switch Operating voltage: 10 to 30 V
Proximity switch	SJ 3.5-N	SJ 3.5-SN	SB 3.5-E2
Permissible ambient temperature[1)]	–20 to 70 °C	–20 to 100 °C	–20 to 70 °C
With metal cable gland	–25 to 70 °C	–40 to 100 °C	–25 to 70 °C
Degree of protection	IP 65		
Weight	Approx. 0.7 kg		
Type 4746-x3 Electric Limit Switch			
Switching element	Electric limit switch: changeover/SPDT switch (single-pole/double-throw type)		
Permissible load	Alternating voltage: 220 V, 6.9 A Direct voltage: 220 V, 0.25 A · 20 V, 6.9 A		
Permissible ambient temperature[1)]	Without explosion protection: –20 to 85 °C		
With metal cable gland	–40 to 85 °C		
Degree of protection	IP 65		
Weight	Approx. 0.7 kg		
Type 4746-04 Pneumatic Limit Switch			
Switching element	Pneumatic limit switch with subsequent pneumatic microswitch		
Supply air	1.4 bar (20 psi), can be briefly overloaded up to 4 bar (60 psi)		
Air consumption	0.04 m_n^3/h		
Output	0 or 1.4 bar (20 psi)		
Air output capacity	1 switch closed: 0.7 m_n^3/h 2 switches closed: 1.0 m_n^3/h		
Permissible ambient temperature[1)]	–20 to 60 °C		
Degree of protection	IP 54		
Weight	Approx. 0.75 kg		
Materials			
Case and cover	Aluminum, powder-coated		
Lever and shaft	WN 1.4571		

[1)] Observe the limitations concerning permissible ambient temperatures specified in the EC type examination certificate.

Table 2 · Technical data for Type 4746-1 in type of protection Ex ia ATEX
Maximum values for connection to certified intrinsically safe circuits

Limit switches	**Type 4746-12**	**Type 4746-13**
Limit switches	Inductive	Electric
U_i	16 V	45 V
I_i	52 mA	–
P_i	169 mW	2 W
C_i - Effective inner capacitance	60 nF	Negligibly small
L_i - Effective inner inductance	160 µH	
Temperature classes	Ambient temperature range according to type examination certificate (Technical data specified in Table 1 apply additionally)	
T4	–45 to 80 °C	
T5	–45 to 70 °C	
T6	–45 to 60 °C	

Table 3 · Hysteresis (dead band) in mm

Types 4746	-x2	-x3	-04
Lever length L	Hysteresis in mm		
50 mm	0.15 (0.25*)	0.6	0.75
120 mm	0.30 (0.55*)	1.0	1.5

* Special version

Ordering text

Limit Switch Types 4746 -x2/ -x3/ -04
Operating as make/ break contact
To signalize Valve OPEN-CLOSED
Optionally, special version

Accessories

Mounting parts for attachment to
- Type 4763/4765 Positioner
- Valve with cast yoke with lever I or II
- Valve with rod-type yoke with lever I or II

Adapter ½ NPT for electrical connections

Dimensions in mm

Types 4746-x2, -x3 · Air connection for separate ventilation: tapped hole G ⅛

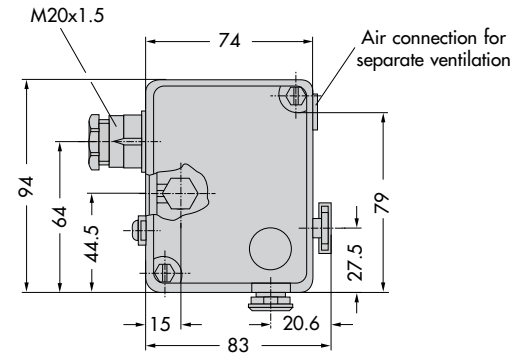

Type 4746-04 · Air connection: tapped hole G ⅛ or ⅛ NPT

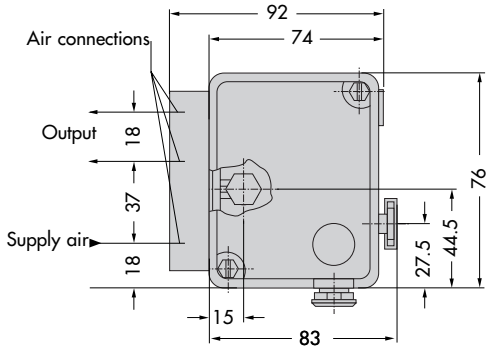

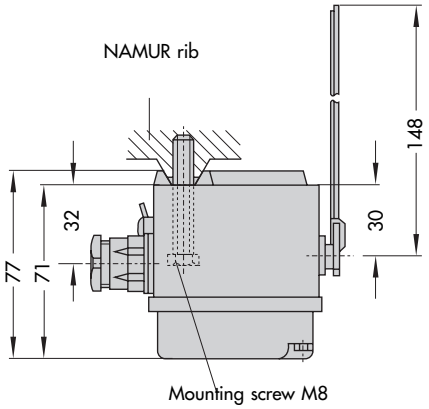

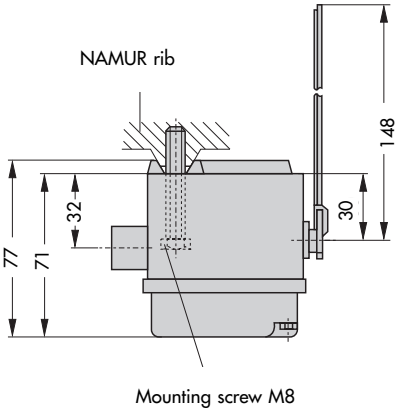

The dimensions required for attachment to Type 4765 Pneumatic Positioners or Type 4763 Electropneumatic Positioners can be found in Mounting and Operating Instructions EB 8365 EN.

Electrical connections

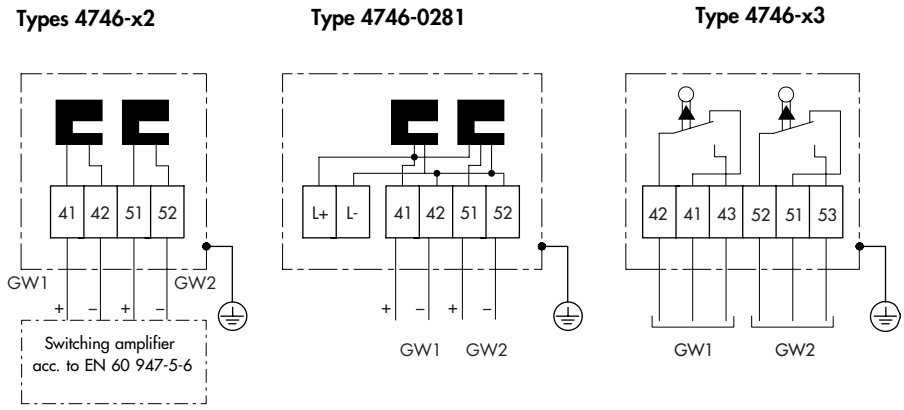

Summary of the approved explosion protection certificates for Type 4746

Certificate type	Certificate number	Date	Comments
EC Type Examination Certificate	PTB 98 ATEX 2114	2001-01-09	Ⓔx II 2 G EEx ia IIC T6
Statement of Conformity	PTB 02 ATEX 2012 X	2002-04-05	Ⓔx II 3 G EEx nA II T6
Certificate of Conformity	PTB No. Ex-81.C.2170	1981-11-16	EEx ib IIC T6
First Addendum		1986-07-30	US cable entry
Second Addendum		1988-04-29	Connector
Third Addendum		1996-05-20	Type designation changed
CSA Certificate	LR 54227-1	1985-01-31	Class I; Groups A, B, C and D
Encl. 3			Class II; Group G
	LR 54227-19	1994-05-09	Encl. 4
FM Certificate	J.I. OMO A4. AX	1986-03-12	Class I, II, III; Div. 1
			Groups A, B, C, D, E, F, G
	J.I. 5Y2 A3.AX	1995-04-26	Div. 2
SEV Certificate	98.5.50771.07	1998-04-24	EEx ib IIC T6
CZ Certificate	FTZÜ 99 Ex 106X	1999-02-18	Ex II 2 G EEx ia IIC T6
GOST Certificate	A-0367	1996-03-28	Valid until 2001, 1 Ex ib IIC T6

The test certificates above are contained in the mounting and operating instructions and are available on request.

Ordering code (for model index .07 or higher)

Limit Switch	**Type 4746-**	x	x	x	x	2	x	x
Explosion protection								
Without		0						
Ⓔx II 2 G EEx ia IIC T6 acc. ATEX		1						
CSA/FM		3	2					
Ⓔx II 3 G EEx nA II T6 acc. ATEX		8						
Type								
Inductive			2					
Electric			3					
Pneumatic		0	4					
Two contacts								
Inductive, SJ 3.5 N			2	0	0		1	0
Inductive, SJ 3.5 SN			2	1	0		1	0
Elec. microswitch			3	2	0		1	0
Elec. microswitch (gold contacts)			3	2	1		1	0
Pneumatic microswitch		0	4	4	0		0	
Induct. SB 3.5-E2, 3-wire switch		0	2	8	1		1	0
Electrical connection								
Without		0	4	4	0		0	
M20 x 1.5							1	
Pneumatic connection								
Without								0
ISO 228/1-G⅛		0	4	4	0		0	1
⅛-27 NPT		0	4	4	0		0	2

Specifications subject to change without notice.

SAMSON AG · MESS- UND REGELTECHNIK
Weismüllerstraße 3 · 60314 Frankfurt am Main · Germany
Phone +49 69 4009-0 · Fax +49 69 4009-1507
Internet: http://www.samson.de

Solenoid Valve Type 3963

General notes

The Type 3963 Solenoid Valves ensure a high level of operational reliability and fast response times for controlling pneumatic actuators in hazardous areas.

Intrinsically safe, low-power binary signals issued by automation or fieldbus systems can be used for controlling purposes.

The Type 3963 Solenoid Valves offer a variety of switching functions, flow rates and connections for all desired applications (Fig. 1).

Special features of the Type 3963 Solenoid Valves include:

- Suitable for safety shut-off valves up to class AK 7 according to DIN V 19251 (optionally)
- Corrosion-resistant enclosure with degree of protection IP 54 or IP 65 for applications in humid, aggressive environments
- Versions free of silicone/compatible with paint (available on request)
- Service life $\geq 2 \times 10^7$ switching cycles
- Ambient temperature −45 to +80 °C, depending on the type of protection and temperature class
- Rail mounting or wall mounting
- Attachment to linear actuators with NAMUR rib according to DIN EN 60534-6-1 or to rotary actuators with NAMUR interface according to VDI/VDE 3845

- E/P binary converter with flapper/nozzle assembly
- Nominal signals 6 V DC, 12 V DC, 24 V DC, 24 V AC, 48 V AC, 115 V AC or 230 V AC
- Type of protection II 2 G EEx ia IIC T6, CSA, FM and II 3 G EEx nA II T6 for DC signals
- Power consumption 6 to 27 mW or 0.04 to 0.46 VA, depending on the nominal signal
- Manual override as pushbutton or pushbutton switch (optionally)
- Air supply 1.4 to 6 bar
- Electrical connection via cable gland M 20 × 1.5 to terminals or via a plug-type connector
- Cable break protection device (accessory)

- Booster valve with diaphragm or piston, single or double actuated
- 3/2, 5/2, 5/3 or 6/2-way function
- Exhaust air return (optionally)
- K_{vs} value 0.16 to 4.3
- Supply air/exhaust air restrictors for adjusting different closing and opening times in a ratio of 1:15 (optionally)
- Threaded connection G (NPT) 1/4 or 1/2/NAMUR

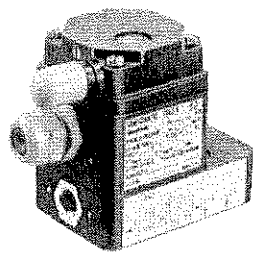

Type 3963-XX11 5/2-way Solenoid Valve

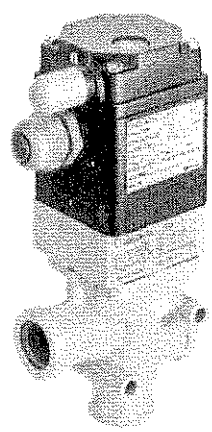

Type 3963-XX25 3/2-way Pilot Valve
combined with
Type 3756-1203 3/2-way Booster Valve G 1/2

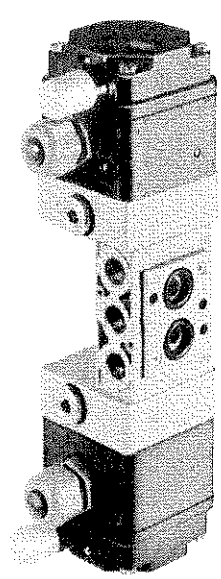

Type 3963-XX76 3/2-way Pilot Valves
combined with
Type 3756-3327 5/2-way Booster Valve G 1/4/NAMUR

Fig. 1

Versions with threaded connection

Type 3963 Solenoid Valves for on-off/continuous actuators

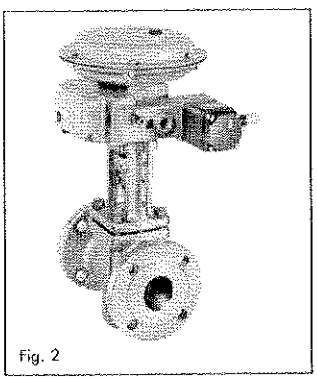

Fig. 2

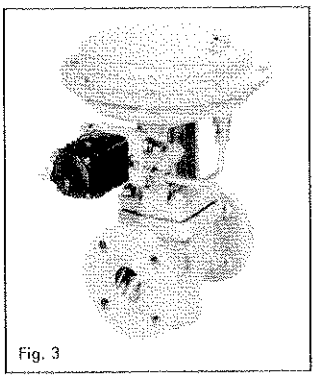

Fig. 3

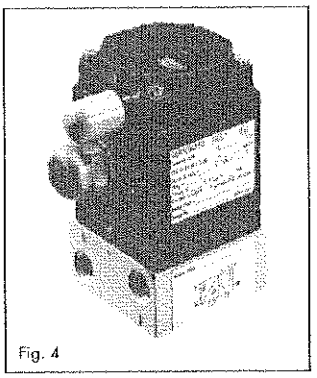

Fig. 4

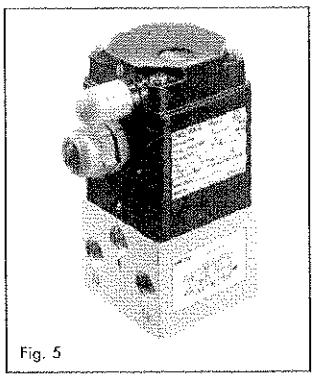

Fig. 5

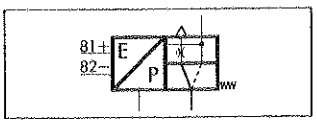

Type 3963-XX29 Solenoid Valve
- 3/2-way function
- Adjustable exhaust air restrictor
- K_{vs} value 0.16
- Attachment via a connection block to SAMSON's Type 3277 Linear Actuator with SAMSON's Type 3730/3766/3767/378X Positioner (see Fig. 2)

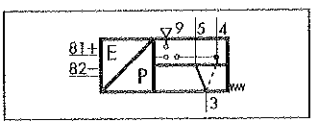

Type 3963-XX53 Solenoid Valve
- 3/2-way function
- K_{vs} value 0.32
- Connection G (NPT) 1/4
- Safety function according to TÜV
- Attachment to linear actuators with NAMUR rib, e. g. SAMSON's Type 271 Actuator (see Fig. 3)

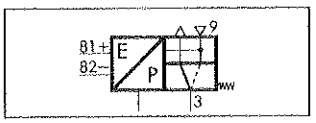

Type 3963-XX27 Solenoid Valve
- 3/2-way function
- K_{vs} value 0.16
- Connection G (NPT) 1/4
- Safety function according to TÜV
- Rail mounting, wall mounting or mounting with pipe fittings to on-off linear actuators, e. g. SAMSON's Type 271/3277 Actuator

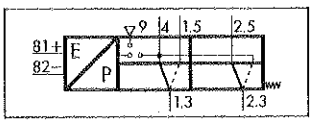

Type 3963-XX14 Solenoid Valve
- 5/2-way function
- K_{vs} value 0.16
- Connection G (NPT) 1/4
- Rail mounting or wall mounting

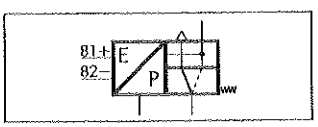

Type 3963-XX55 Solenoid Valve
- 3/2-way function
- K_{vs} value 0.32
- Safety function according to TÜV
- Attachment via a connection block to SAMSON's Type 3277 Linear Actuator with SAMSON's Type 3730/3766/3767/378X Positioner (see Fig. 2)

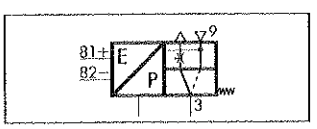

Type 3963-XX28 Solenoid Valve
- 3/2-way function
- Adjustable exhaust air restrictor
- K_{vs} value 0.16
- Connection G (NPT) 1/4
- Rail mounting, wall mounting or mounting with pipe fittings to on-off linear actuators, e. g. SAMSON's Type 271/3277 Actuator

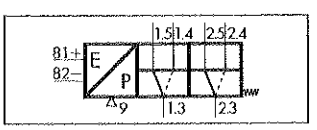

Type 3963-XX64 Solenoid Valve
- 6/2-way function
- K_{vs} value 0.16
- Connection G (NPT) 1/4
- Rail mounting or wall mounting

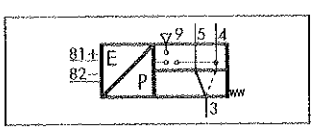

Type 3963-XX54 Solenoid Valve
- 3/2-way function
- K_{vs} value 0.32
- Connection G (NPT) 1/4
- Safety function according to TÜV
- Rail mounting, wall mounting or mounting with pipe fittings to on-off linear actuators, e. g. SAMSON's Type 271/277 Actuator

Versions with threaded connection (continued from page 2)

Solenoid valves consisting of Type 3963 Pilot Valve ①/Type 3756 Booster Valve ②, for on-off/continuous actuators

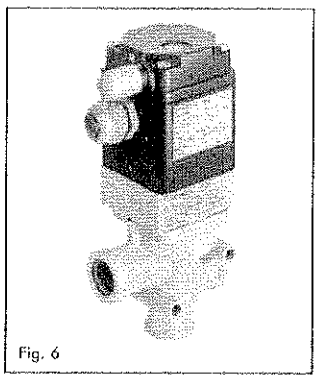

Fig. 6

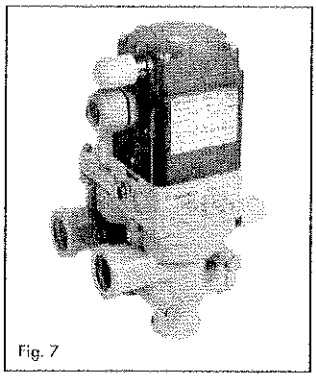

Fig. 7

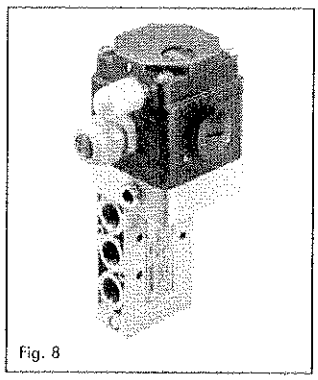

Fig. 8

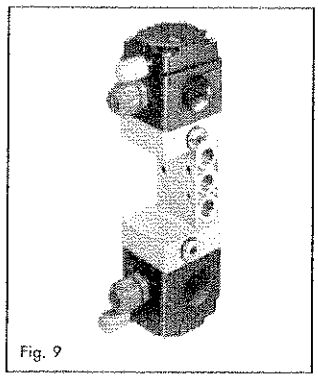

Fig. 9

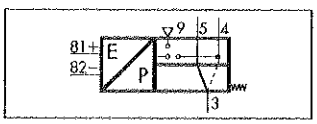

Type 3963-XX25 Pilot Valve ①/
Type 3756-X2X3 Booster Valve ②
- 3/2-way function
- K_{vs} value 4.3
- Connection G (NPT) 1/2
- Safety function according to TÜV
- Wall mounting or mounting with pipe fittings to linear actuators, e. g. SAMSON's Type 271/3277 Actuator

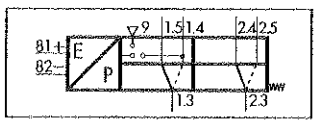

Type 3963-XX25 Pilot Valve ①/
Type 3756-X209 Booster Valve ②
- 5/2-way function
- K_{vs} value 4.3
- Connection G (NPT) 1/2
- Wall mounting

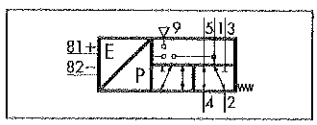

Type 3963-XX76 Pilot Valve ①/
Type 3756-X205 Booster Valve ②
- 5/2-way function
- K_{vs} value 1.4
- Connection G (NPT) 1/4
- Wall mounting or mounting with pipe fittings to linear actuators, e. g. SAMSON's Type 271/3277 Actuator

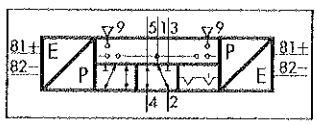

Type 3963-XX76 Pilot Valves ①/
Type 3756-X325 Booster Valve ②
- 5/2-way function, detented (two positions)
- K_{vs} value 1.4
- Connection G (NPT) 1/4
- Safety function according to TÜV
- Wall mounting

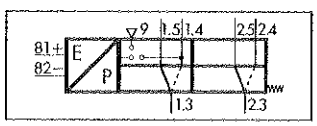

Type 3963-XX25 Pilot Valve ①/
Type 3756-X210 Booster Valve ②
- 6/2-way function
- K_{vs} value 4.3
- Connection G (NPT) 1/2
- Wall mounting

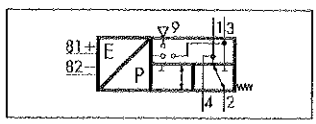

Type 3963-XX76 Pilot Valve ①/
Type 3756-X206 Booster Valve ②
- 3/2-way function
- Exhaust air return
- K_{vs} value 1.4
- Connection G (NPT) 1/4
- Safety function according to TÜV
- Wall mounting or mounting with pipe fittings to linear actuators, e. g. SAMSON's Type 271/3277 Actuator

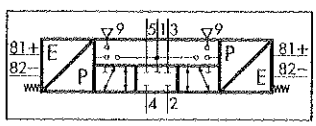

Type 3963-XX76 Pilot Valves ①/
Type 3756-X335 Booster Valve ②
- 5/3-way function, spring centered (ports 2 and 4 closed)
- K_{vs} value 1.4
- Connection G (NPT) 1/4
- Wall mounting

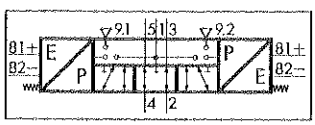

Type 3963-XX76 Pilot Valves ①/
Type 3756-X345 Booster Valve ②
- 5/3-way function, spring centered (ports 2 and 4 vented)
- K_{vs} value 1.4
- Connection G (NPT) 1/4
- Safety function according to TÜV
- Wall mounting

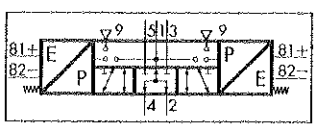

Type 3963-XX76 Pilot Valves ①/
Type 3756-X355 Booster Valve ②
- 5/3-way function, spring centered (ports 2 and 4 to air supply)
- K_{vs} value 1.4
- Connection G (NPT) 1/4
- Wall mounting

Versions with NAMUR interface

Type 3963 Solenoid Valves for on-off/continuous actuators

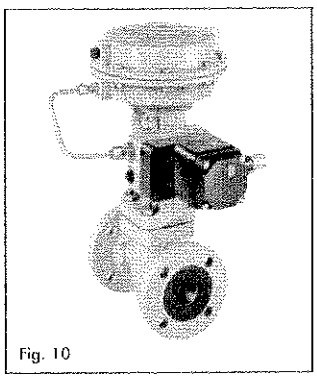

Fig. 10

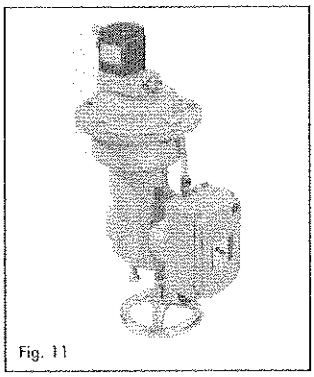

Fig. 11

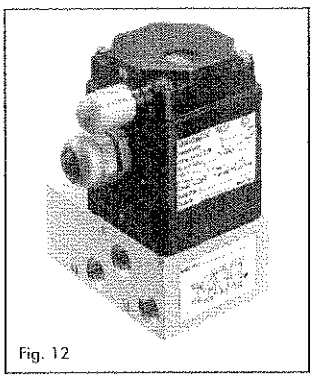

Fig. 12

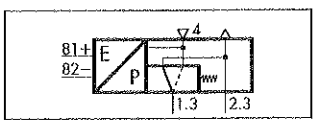

Type 3963-XX21 Solenoid Valve
- 3/2-way function
- K_{vs} value 0.16
- Connection G (NPT) 1/4/NAMUR
- Safety function according to TÜV
- Attachment to on-off rotary actuators with NAMUR interface or via adapter plate (Order No. 1400-6751) to linear actuators with NAMUR rib, e. g. SAMSON's Type 241-1 (see Fig. 10)

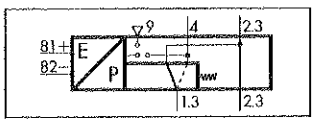

Type 3963-XX52 Solenoid Valve
- 3/2-way function
- K_{vs} value 0.32
- Connection G (NPT) 1/4/NAMUR
- Safety function according to TÜV
- Attachment to rotary actuators with NAMUR interface, e. g. SAMSON's Type 3278 equipped with a SAMSON positioner (see Fig. 11)

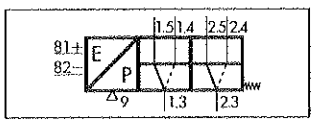

Type 3963-XX62 Solenoid Valve
- 6/2-way function
- K_{vs} value 0.16
- Connection G (NPT) 1/4/NAMUR
- Attachment to rotary actuators with NAMUR interface or via adapter plate (Order No. 1400-6751) to linear actuators with NAMUR rib

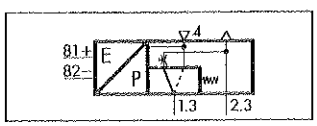

Type 3963-XX22 Solenoid Valve
- 3/2-way function
- Adjustable exhaust air restrictor
- K_{vs} value 0.16
- Connection G (NPT) 1/4/NAMUR
- Attachment to on-off rotary actuators with NAMUR interface or via adapter plate (Order No. 1400-6751) to linear actuators with NAMUR rib, e. g. SAMSON's Type 241-1 (see Fig. 10)

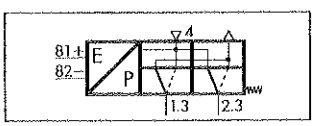

Type 3963-XX11 Solenoid Valve
- 5/2-way function
- K_{vs} value 0.16
- Connection G (NPT) 1/4/NAMUR
- Attachment to on-off rotary actuators with NAMUR interface, e. g. SAMSON's Type 3278 equipped with a SAMSON positioner (see Fig. 11)

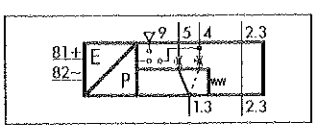

Type 3963-XX23 Solenoid Valve
- 3/2-way function
- Adjustable supply air/exhaust air restrictors
- K_{vs} value 0.16
- Connection G (NPT) 1/4/NAMUR
- Attachment to on-off rotary actuators with NAMUR interface or via adapter plate (Order No. 1400-6751) to linear actuators with NAMUR rib, e. g. SAMSON's Type 241-1 (see Fig. 10)

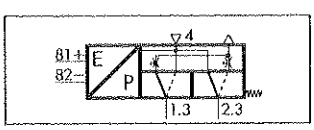

Type 3963-XX12 Solenoid Valve
- 5/2-way function
- Two adjustable exhaust air restrictors
- K_{vs} value 0.16
- Connection G (NPT) 1/4/NAMUR
- Attachment to on-off rotary actuators with NAMUR interface, e. g. SAMSON's Type 3278 equipped with a SAMSON positioner (see Fig. 11)

Versions with NAMUR interface (continued from page 4)

Solenoid valves consisting of Type 3963 Pilot Valve ①/Type 3756 Booster Valve ②, for on-off/continuous actuators

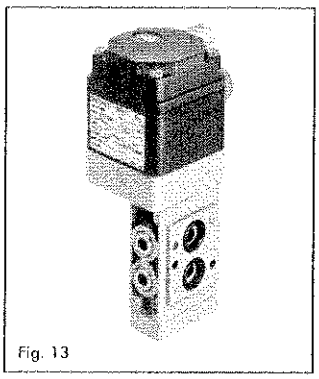

Fig. 13

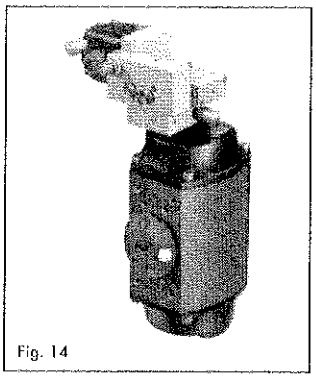

Fig. 14

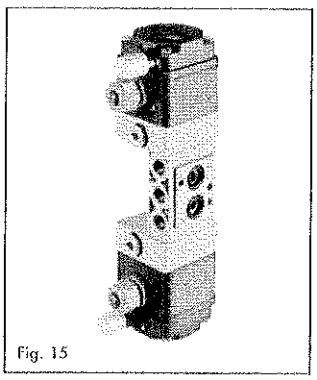

Fig. 15

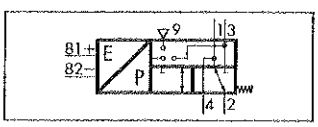

Type 3963-XX76 Pilot Valve ①/
Type 3756-X208 Booster Valve ②
- 3/2-way function
- Exhaust air return
- K_{vs} value 1.4
- Connection G (NPT) $^1/_4$/NAMUR
- Safety function according to TÜV
- Attachment to rotary actuators with NAMUR interface or via adapter plate (Order No. 1400-6751) to linear actuators with NAMUR rib

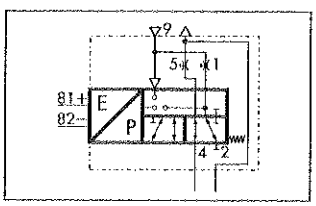

Type 3963-XX76 Pilot Valve ①/
Type 3756-X207 Booster Valve ②/
Restrictor block (Order No. 1400-6763)
- 5/2-way function
- K_{vs} value 1.4
- Connection G $^1/_4$ (NPT)/NAMUR
- Attachment to single-acting on-off rotary actuators with NAMUR interface (see Fig. 14)

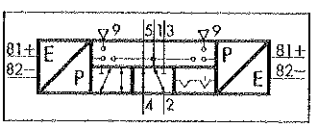

Type 3963-XX76 Pilot Valves ①/
Type 3756-X327 Booster Valve ②
- 5/2-way function, detented (two positions)
- K_{vs} value 1.4
- Connection G (NPT) $^1/_4$/NAMUR
- Safety function according to TÜV
- Attachment to rotary actuators with NAMUR interface

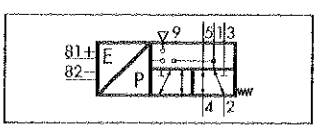

Type 3963-XX76 Pilot Valve ①/
Type 3756-X207 Booster Valve ②
- 5/2-way function
- K_{vs} value 1.4
- Connection G (NPT) $^1/_4$/NAMUR
- Attachment to rotary actuators with NAMUR interface or via adapter plate (Order No. 1400-6751) to linear actuators with NAMUR rib

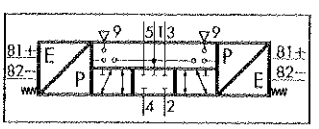

Type 3963-XX76 Pilot Valves ①/
Type 3756-X337 Booster Valve ②
- 5/3-way function, spring centered (ports 2 and 4 closed)
- K_{vs} value 1.4
- Connection G (NPT) $^1/_4$/NAMUR
- Attachment to rotary actuators with NAMUR interface

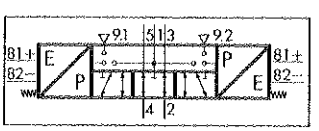

Type 3963-XX76 Pilot Valves ①/
Type 3756-X347 Booster Valve ②
- 5/3-way function, spring centered (ports 2 and 4 vented)
- K_{vs} value 1.4
- Connection G (NPT) $^1/_4$/NAMUR
- Safety function according to TÜV
- Attachment to rotary actuators with NAMUR interface

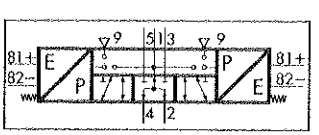

Type 3963-XX76 Pilot Valves ①/
Type 3756-X357 Booster Valve ②
- 5/3-way function, spring centered (ports 2 and 4 to air supply)
- K_{vs} value 1.4
- Connection G (NPT) $^1/_4$/NAMUR
- Attachment to rotary actuators with NAMUR interface

Function

Solenoid valves with single actuation

The solenoid valves consist of an E/P binary converter Ⓐ with manual override Ⓑ (optionally) and a single-actuated booster valve © with return spring (Fig. 16).

The booster valve © supplies the E/P binary converter Ⓐ internally with the air supply (delivery state). Rotating the flat gasket allows the E/P binary converter Ⓐ to be supplied with external air supply via connection 9.

The pressure reducer ⑤ reduces the air supply pressure to 1.4 bar.

In the normal position, the flapper ② is lifted off the outlet nozzle ① by the spring ③. As a result, a pressure lower than the switch-off pressure of the booster valve © builds up in the pressure divider that consists of a restriction ⑥ and an outlet nozzle ①.

When the solenoid ④ is energized by an electrical binary signal, the outlet nozzle ① is closed by the flapper ② against the force of the spring ③. As a result, the pressure in the pressure divider rises above the switch-on pressure of the booster valve ©, thus switching it to the operating position.

After de-energizing the electrical binary signal, the booster valve © will be switched to the normal position by a return spring.

Solenoid valves with double actuation

The solenoid valves consist of two E/P binary converters Ⓐ with manual override Ⓑ (optionally) and a detented or spring-centered double-actuated booster valve ©.

The booster valve © supplies the E/P binary converters Ⓐ internally with the air supply (delivery state). Rotating the two flat gaskets allow the E/P binary converters Ⓐ to be supplied with external air supply via connection 9.

The pressure reducer ⑤ reduces the air supply pressure to 1.4 bar.

In the normal position, the flapper ② is lifted off the outlet nozzle ① by the spring ③. As a result, a pressure lower than the switch-off pressure of the booster valve © builds up in the pressure divider that consists of a restriction ⑥ and an outlet nozzle ①.

When the solenoid ④ is energized by an electrical binary signal, the outlet nozzle ① is closed by the flapper ② against the force of the spring ③. As a result, the pressure in the pressure divider rises above the switch-on pressure of the booster valve ©, thus switching it to the operating position.

After de-energizing the electrical binary signal, the operating position of the detented booster valve © will be retained until a reverse signal is received. After de-energizing the electrical binary signal, the spring-centered booster valve © will be switched to the mid-position by a return spring.

Energizing both E/P binary converters Ⓐ at the same time must be prevented by appropriate electrical control.

Functional diagram

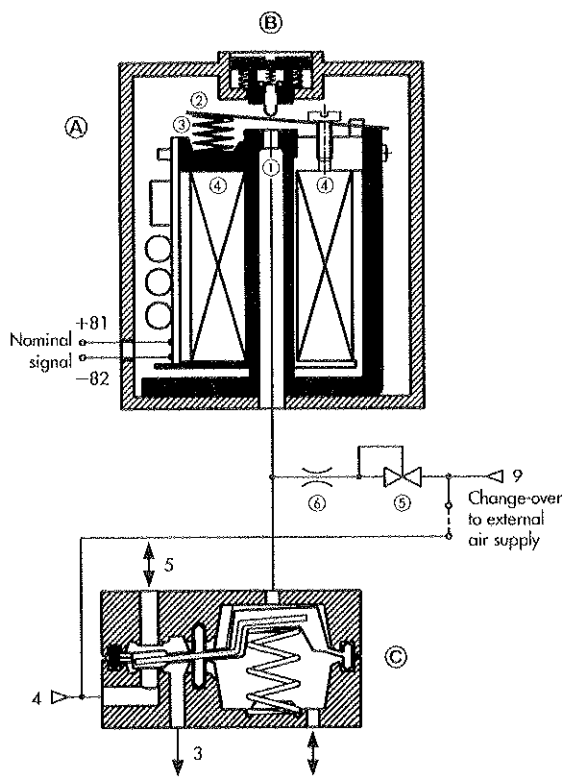

Fig. 16 · Solenoid valve with diaphragm element (K_{vs} value 0.16)

Technical data

Type 3963 Solenoid Valves								
General data								
Construction		Solenoid with flapper/nozzle assembly and diaphragm elements						
Degree of protection		IP 54 with filter, IP 65 with filter check valve						
Material Enclosure		Trogamid TG 35, glass-fiber reinforced, black						
Connection plate		Al Mg, powder-coated, grayish beige, RAL 1019, or stainless steel on request, Trogamid TG 35, glass-fiber reinforced, black (for Types 3963-XX11/-XX12/-XX21/-XX22)						
Screws		Stainless steel						
Springs		Stainless steel						
Gaskets		Silicone rubber, Perbunan						
Diaphragms		Chloroprene 57 Cr 868 (−25 to +80 °C), silicone rubber (−45 to +80 °C)						
Ambient temperature		See "Electrical data"						
Mounting position		As desired						
Weight approx.		570 g						
Electrical data								
Nominal signal	U_n	**6 V DC** max. 27 V [1]	**12 V DC** max. 25 V [1]	**24 V DC** max. 32 V [1]	**24 V AC** max. 36 V [1]	**48 V AC** max. 80 V [1]	**115 V AC** max. 130 V [1]	**230 V AC** max. 255 V [1]
	f	–			48 to 62 Hz			
Switching point "On"	$U_{+80\,°C}$	≥ 4.8 V	≥ 9.6 V	≥ 18 V	19 to 36 V	42 to 80 V	82 to 130 V	183 to 255 V
	$I_{+20\,°C}$	≥ 1.41 mA	≥ 1.52 mA	≥ 1.57 mA	≥ 1.9 mA	≥ 1.9 mA	≥ 2.2 mA	≥ 2.6 mA
	$P_{+20\,°C}$	≥ 5.47 mW	≥ 13.05 mW	≥ 26.71 mW	≥ 0.04 VA	≥ 0.07 VA	≥ 0.17 VA	≥ 0.46 VA
"Off"	$U_{-25\,°C}$	≤ 1.0 V	≤ 2.4 V	≤ 4.7 V	≤ 4.5 V	≤ 9 V	≤ 18 V	≤ 36 V
Input impedance	$R_{+20\,°C}$	2.6 kΩ	5.5 kΩ	10.7 kΩ	Approx. 10 kΩ	Approx. 24 kΩ	Approx. 40 kΩ	Approx. 80 kΩ
Temperature effect		0.4 %/°C	0.2 %/°C	0.1 %/°C	0.1 %/°C	0.1 %/°C	0.05 %/°C	0.03 %/°C
Type of protection [2]		II 2 G EEx ia IIC T6 or II 3 G EEx nA II T6			Without explosion protection			
Output voltage [3]	U_i	25 V 27 V 28 V 30 V 32 V			–			
Output current [3]	I_i	150 mA 125 mA 115 mA 100 mA 85 mA			–			
Power dissipation [3]	P_i	250 mW	No limitation		–			
External inductance [3]	L_i	Negligible			–			
External capacitance [3]	C_i	Negligible			–			
Ambient temperature [4]		−25 to +60 °C (temperature class T6), −25 to +70 °C (temperature class T5), −25 to +80 °C (temperature class T4)			−25 to +80 °C			
Connection		Connection to a terminal or via a plug-type connector (see "Versions and ordering data", page 22)						
Pneumatic data								
Type 3963		**-XX20/-XX22 -XX23/-XX28 -XX29**	**-XX21 -XX27**	**-XX50**	**-XX52/-XX53 -XX54/-XX55**	**-XX10/-XX11 -XX12/-XX14**	**-XX60/-XX62 -XX64**	
Safety function		–	TÜV [5]	–	TÜV [5]	–	–	
Version		3/2-way function		3/2-way function		5/2-way function	6/2-way function	
K_{vs} value [6]		0.16		0.32		0.16	0.16	
Air supply	Medium	Instrument air, free of corrosive particles, or nitrogen						
	Pressure	1.4 to 6 bar						
Operating medium		Instrument air, free of corrosive particles [7], oil-containing air or noncorrosive gases [8]						
Operating pressure max.		6 bar						
Output signal		Operating pressure						
Air consumption		≤ 80 l/h at 1.4 bar air supply (normal position), ≤ 10 l/h at 1.4 bar air supply (operating position)						
Switching time [9]		≤ 65 ms						
Switching cycles		$\geq 2 \times 10^7$ (−25 to +80 °C), $\geq 2 \times 10^6$ (−45 to +80 °C)						
Connection		G (NPT) 1/4						

[1] Permissible maximum value at continuous duty. For Ex versions, the permissible maximum value U_i applies.
[2] According to EC-type-examination Certificate PTB 01 ATEX 2085 or Statement of Conformity PTB 01 ATEX 2086X.
[3] Permissible maximum values when connected to a certified intrinsically safe circuit.
[4] Permissible ambient temperature −45 °C with diaphragms made of silicone rubber.
[5] Report No. S63/00 (used on control valves according to DIN 3394 Part 1, DIN EN 161, DIN 32725, DIN EN 264 and DIN 32730), Report No. S64/00 (safety function up to class AK 7 according to DIN V 19251).
[6] Air flow at $p_1 = 2.4$ bar and $p_2 = 1.0$ bar can be calculated according to the following equation: $Q = K_{vs} \times 36.22$, expressed in m^3/h.
[7] With internal air supply (delivery state).
[8] With external air supply (see mounting and operating instructions EB 3963 EN).
[9] For Types 3963-XX12/-XX22/-XX23/-XX29 with supply air/exhaust air restrictors different closing and opening times can be adjusted in a ratio of 1:15.

Technical data (continued from page 7)

Type 3963 Pilot Valves ① for Type 3756 Booster Valves ②							
General data							
Construction	Solenoid with flapper/nozzle assembly and diaphragm element						
Degree of protection	IP 54 with filter, IP 65 with filter check valve						
Material Enclosure	Trogamid TG 35, glass-fiber reinforced, black						
Connection plate	Al Mg, powder-coated, grayish beige RAL 1019, or stainless steel on request						
Screws	Stainless steel						
Springs	Stainless steel						
Gaskets	Silicone rubber, Perbunan						
Diaphragm	Chloroprene 57 Cr 868 (−25 to +80 °C), silicone rubber (−45 to +80 °C)						
Ambient temperature	See "Electrical data"						
Mounting position	As desired						
Weight approx.	250 g						
Electrical data							
Nominal signal U_n	**6 V DC** max. 27 V [1]	**12 V DC** max. 25 V [1]	**24 V DC** max. 32 V [1]	**24 V AC** max. 36 V [1]	**48 V AC** max. 80 V [1]	**115 V AC** max. 130 V [1]	**230 V AC** max. 255 V [1]
f	–			48 to 62 Hz			
Switching point "On" $U_{+80\,°C}$	≥ 4.8 V	≥ 9.6 V	≥ 18 V	19 to 36 V	42 to 80 V	82 to 130 V	183 to 255 V
$I_{+20\,°C}$	≥ 1.41 mA	≥ 1.52 mA	≥ 1.57 mA	≥ 1.9 mA	≥ 1.9 mA	≥ 2.2 mA	≥ 2.6 mA
$P_{+20\,°C}$	≥ 5.47 mW	≥ 13.05 mW	≥ 26.71 mW	≥ 0.04 VA	≥ 0.07 VA	≥ 0.17 VA	≥ 0.46 VA
"Off" $U_{-25\,°C}$	≤ 1.0 V	≤ 2.4 V	≤ 4.7 V	≤ 4.5 V	≤ 9 V	≤ 18 V	≤ 36 V
Input impedance $R_{+20\,°C}$	2.6 kΩ	5.5 kΩ	10.7 kΩ	Approx. 10 kΩ	Approx. 24 kΩ	Approx. 40 kΩ	Approx. 80 kΩ
Temperature effect	0.4 %/°C	0.2 %/°C	0.1 %/°C	0.1 %/°C	0.1 %/°C	0.05 %/°C	0.03 %/°C
Type of protection [2]	II 2 G EEx ia IIC T6 or II 3 G EEx nA II T6			Without explosion protection			
Output voltage [3] U_i	25 V 27 V 28 V 30 V 32 V			–			
Output current [3] I_i	150 mA 125 mA 115 mA 100 mA 85 mA			–			
Power dissipation [3] P_i	250 mW	No limitation		–			
External inductance [3] L_i	Negligible			–			
External capacitance [3] C_i	Negligible			–			
Ambient temperature [4]	−25 to +60 °C (temperature class T6), −25 to +70 °C (temperature class T5), −25 to +80 °C (temperature class T4)			−25 to +80 °C			
Connection	Connection to a terminal or via a plug-type connector (see "Versions and ordering data", page 23)						
Pneumatic data							
Type 3963	**-XX25**			**-XX76**			
Safety function	TÜV [5]						
Version	3/2-way function						
K_{vs} value [6]	0.16			0.01			
Air supply Medium	Instrument air, free of corrosive particles, or nitrogen						
Pressure	1.4 to 6 bar						
Output signal	Air supply pressure			≥ 1.2 bar			
Air consumption	≤ 80 l/h at 1.4 bar air supply (normal position), ≤ 10 l/h at 1.4 bar air supply (operating position)						
Switching time	≤ 65 ms						
Switching cycles	$\geq 2 \times 10^7$ (−25 to +80 °C), $\geq 2 \times 10^6$ (−45 to +80 °C)			$\geq 2 \times 10^7$			
Connection	Without connection plate						

[1] Permissible maximum value at continuous duty. For Ex versions, the permissible maximum value U_i applies.
[2] According to EC-type-examination Certificate PTB 01 ATEX 2085 or Statement of Conformity PTB 01 ATEX 2086X.
[3] Permissible maximum values when connected to a certified intrinsically safe circuit.
[4] Permissible ambient temperature −45 °C with diaphragm made of silicone rubber.
[5] Report No. S63/00 (used on control valves according to DIN 3394 Part 1, DIN EN 161, DIN 32725, DIN EN 264 and DIN 32730), Report No. S64/00 (safety function up to class AK 7 according to DIN V 19251).
[6] Air flow at $p_1 = 2.4$ bar and $p_2 = 1.0$ bar can be calculated according to the following equation: $Q = K_{vs} \times 36.22$, expressed in m^3/h.

Technical data (continued from page 8)

Type 3756 Booster Valves ②, single-actuated by one Type 3963-XX25 Pilot Valve ①				
Type 3756	**-X203**	**-X213**	**-X209**	**-X210**
Safety function	TÜV [1])	TÜV [1])	–	–
Version	3/2-way function	3/2-way function	5/2-way function	6/2-way function
K_{vs} value [2]) (in direction of flow)	1.9 (4→3), 1.5 (3→4) 4.3 (3→5), 4.7 (5→3)	1.9 (4→3), 1.5 (3→4) 4.3 (3→5), 4.7 (5→3)	1.9 (4→3), 1.5 (3→4) 4.3 (3→5), 4.7 (5→3)	1.9 (4→3), 1.5 (3→4) 4.3 (3→5), 4.7 (5→3)
Construction	Seat valve, soft-seated type, with return spring			
Material — Enclosure	GD AlSi 12, powder-coated, grayish beige RAL 1019, or stainless steel on request			
Material — Diaphragm	Chloroprene	Silicone rubber	Chloroprene	Chloroprene
Material — Gaskets	Chloroprene	Silicone rubber	Chloroprene	Chloroprene
Material — Screws	Stainless steel			
Actuation	Single-actuated by one Type 3963-XX25 Pilot Valve ① (see "Technical data", page 8)			
Operating medium	Instrument air, free of corrosive particles, or nitrogen [3]), instrument air, free of corrosive particles, oil-containing air or noncorrosive gases [4])			
Operating pressure max. (in direction of flow)	10 bar (4→3, 3→5) 2 bar (as desired)	10 bar (4→3, 3→5) 2 bar (as desired)	10 bar (as desired) 2 bar (as desired)	10 bar (as desired) 2 bar (as desired)
Ambient temperature [5])	−25 to +80 °C	−40 to +80 °C	−25 to +80 °C	−25 to +80 °C
Switching cycles (operating pressure)	$\geq 10^7$ (6 bar) $\geq 10^6$ (10 bar)	$\geq 10^6$ (6 bar) $\geq 10^5$ (10 bar)	$\geq 10^7$ (6 bar) $\geq 10^6$ (10 bar)	$\geq 10^7$ (6 bar) $\geq 10^6$ (10 bar)
Connection	G (NPT) 1/2	G (NPT) 1/2	G (NPT) 1/2	G (NPT) 1/2
Mounting position	As desired			
Weight approx.	585 g	585 g	1 100 g	1 100 g

[1]) Report No. S63/00 (used on control valves according to DIN 3394 Part 1, DIN EN 161, DIN 32725, DIN EN 264 and DIN 32730), Report No. S64/00 (safety function up to class AK 7 according to DIN V 19251).
[2]) Air flow at $p_1 = 2.4$ bar and $p_2 = 1.0$ bar can be calculated according to the following equation: $Q = K_{vs} \times 36.22$, expressed in m^3/h.
[3]) With internal air supply for pilot valve ① (delivery state).
[4]) With external air supply for pilot valve ① (see mounting and operating instructions EB 3963 EN).
[5]) The permissible ambient temperature can be limited by the pilot valve ① (see "Technical data", page 8).

Type 3756 Booster Valves ②, single-actuated by one Type 3963-XX76 Pilot Valve ①				
Type 3756	**-X205**	**-X206**	**-X207**	**-X208**
Safety function	–	TÜV [1])	–	TÜV [1])
Version	5/2-way function	3/2-way function with exhaust air return	5/2-way function	3/2-way function with exhaust air return
K_{vs} value [2])	1.4			
Construction	Piston, metal-to-metal seating, without overlap			
Material — Enclosure	GD AlSi 12, powder-coated, grayish beige RAL 1019, or stainless steel on request			
Material — Gaskets	Perbunan			
Material — Filter	Polyethylene			
Material — Screws	Stainless steel			
Actuation	Single-actuated by one Type 3963-XX76 Pilot Valve ① (see "Technical data", page 8)			
Operating medium	Instrument air, free of corrosive particles, or nitrogen [3]), instrument air, free of corrosive particles, oil-containing air or noncorossive gases [4])			
Operating pressure max.	6 bar [3]) or 10 bar [4])			
Ambient temperature [5])	−45 to +80 °C			
Switching cycles	$\geq 2 \times 10^7$			
Connection	G (NPT) 1/4	G (NPT) 1/4	G (NPT) 1/4 NAMUR [6])	G (NPT) 1/4 NAMUR [6])
Mounting position	As desired			
Weight approx.	485 g			

[1]) Report No. S63/00 (used on control valves according to DIN 3394 Part 1, DIN EN 161, DIN 32725, DIN EN 264 and DIN 32730), Report No. S64/00 (safety function up to class AK 7 according to DIN V 19251).
[2]) Air flow at $p_1 = 2.4$ bar and $p_2 = 1.0$ bar can be calculated according to the following equation: $Q = K_{vs} \times 36.22$, expressed in m^3/h.
[3]) With internal air supply for pilot valve ① (delivery state).
[4]) With external air supply for pilot valve ① (see mounting and operating instructions EB 3963 EN).
[5]) The permissible ambient temperature can be limited by the pilot valve ① (see "Technical data", page 8).
[6]) NAMUR interface according to VDI/VDE 3845.

Technical data (continued from page 9)

Type 3756 Booster Valves ②, double-actuated by two Type 3963-XX76 Pilot Valves ①									
Type 3756		**-X325**	**-X327**	**-X335**	**-X337**	**-X345**	**-X347**	**-X355**	**-X357**
Safety function		TÜV [1]		–		TÜV [1]		–	
Version		5/2-way function, detented (two positions)		5/3-way function, spring-centered (ports 2 and 4 closed)		5/3-way function, spring-centered (ports 2 and 4 vented)		5/3-way function, spring-centered (ports 2 and 4 to air supply)	
K_{vs} value [2]		1.4							
Construction		Piston, metal-to-metal seating, without overlap							
Material	Enclosure	GD AlSi 12, powder-coated, grayish beige RAL 1019, or stainless steel on request							
	Gaskets	Perbunan							
	Filter	Polyethylene							
	Screws	Stainless steel							
Actuation		Double-actuated by two Type 3963-XX76 Pilot Valves ① (see "Technical data", page 8)							
Operating medium		Instrument air, free of corrosive particles, or nitrogen [3], instrument air, free of corrosive particles, oil-containing air or noncorrosive gases [4]							
Operating pressure max.		6 bar [3] or 10 bar [4]							
Ambient temperature [5]		−45 to +80 °C							
Switching cycles		$\geq 2 \times 10^7$							
Connection		G (NPT) 1/4	G (NPT) 1/4 NAMUR [6]	G (NPT) 1/4	G (NPT) 1/4 NAMUR [6]	G (NPT) 1/4	G (NPT) 1/4 NAMUR [6]	G (NPT) 1/4	G (NPT) 1/4 NAMUR [6]
Mounting position		As desired							
Weight approx.		685 g							

[1] Report No. S63/00 (used on control valves according to DIN 3394 Part 1, DIN EN 161, DIN 32725, DIN EN 264 and DIN 32730), Report No. S64/00 (safety function up to class AK 7 according to DIN V 19251).
[2] Air flow at $p_1 = 2.4$ bar and $p_2 = 1.0$ bar can be calculated according to the following equation: $Q = K_{vs} \times 36.22$, expressed in m^3/h.
[3] With internal air supply for pilot valves ① (delivery state).
[4] With external air supply for pilot valves ① (see mounting and operating instructions EB 3963 EN).
[5] The permissible ambient temperature can be limited by the pilot valves ① (see "Technical data", page 8).
[6] NAMUR interface according to VDI/VDE 3845.

Dimensions of devices without threaded connection

Type 3963-XX25 Pilot Valve
Types 3963-XX10/-XX20/-XX50/-XX60 Solenoid Valves

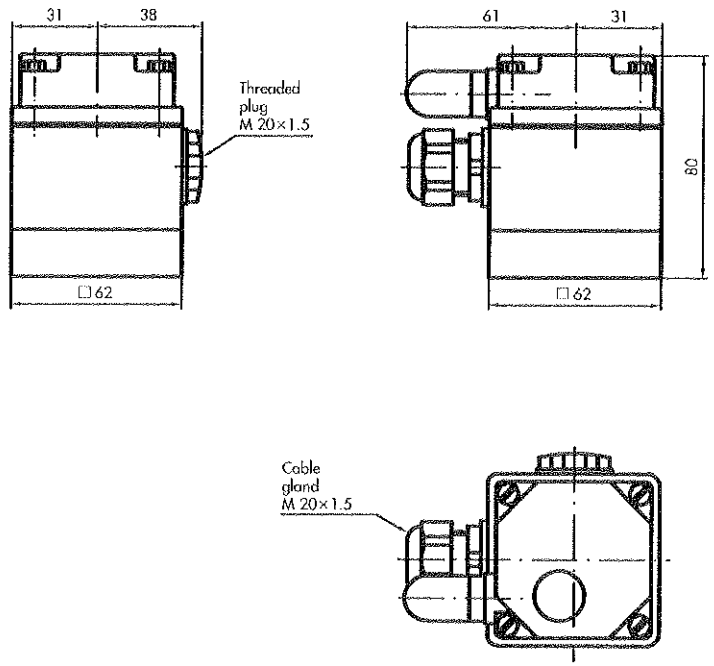

Fig. 17 · Dimensions in mm

Type 3963-XX76 Pilot Valve

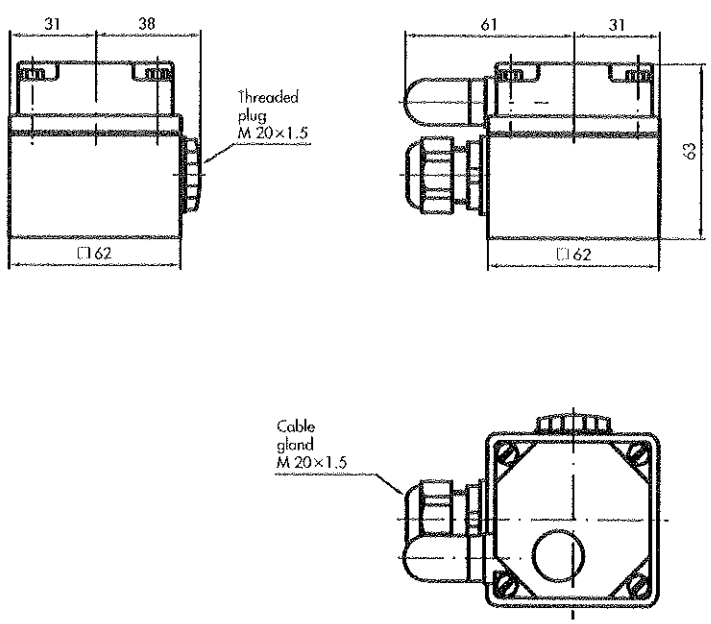

Fig. 18 · Dimensions in mm

Dimensions of devices with threaded connection

Type 3963-XX14 Solenoid Valve

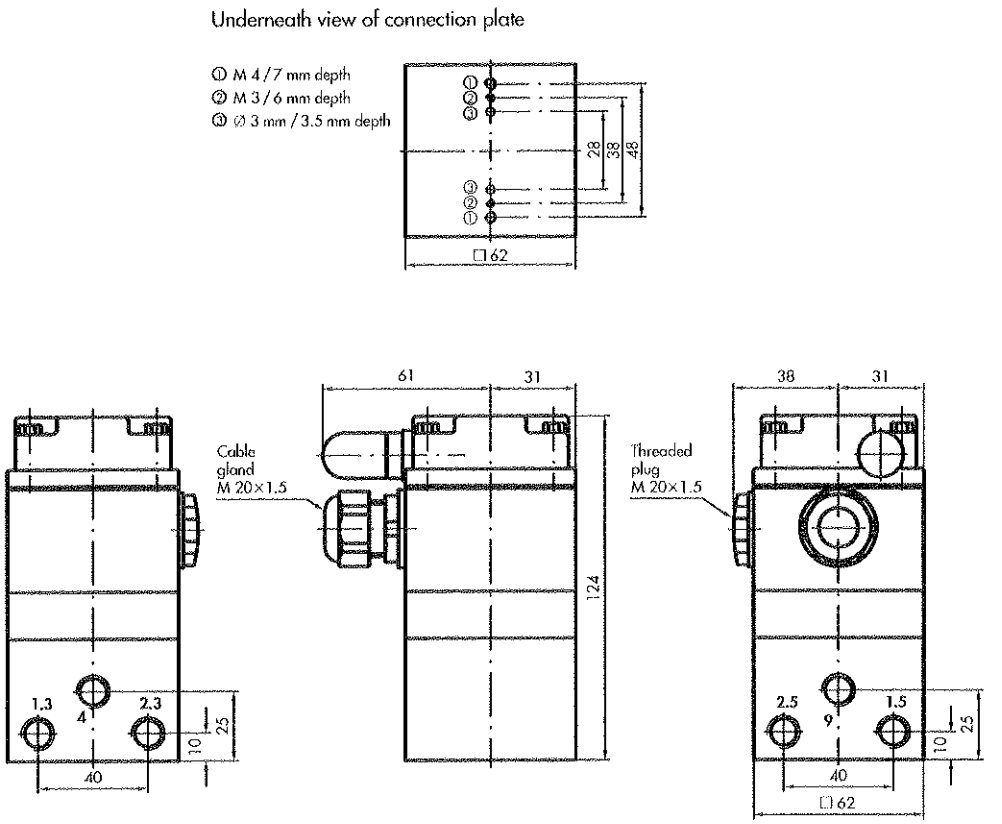

Fig. 19 · Dimensions in mm

Types 3963-XX27/-XX28/-XX54 Solenoid Valves

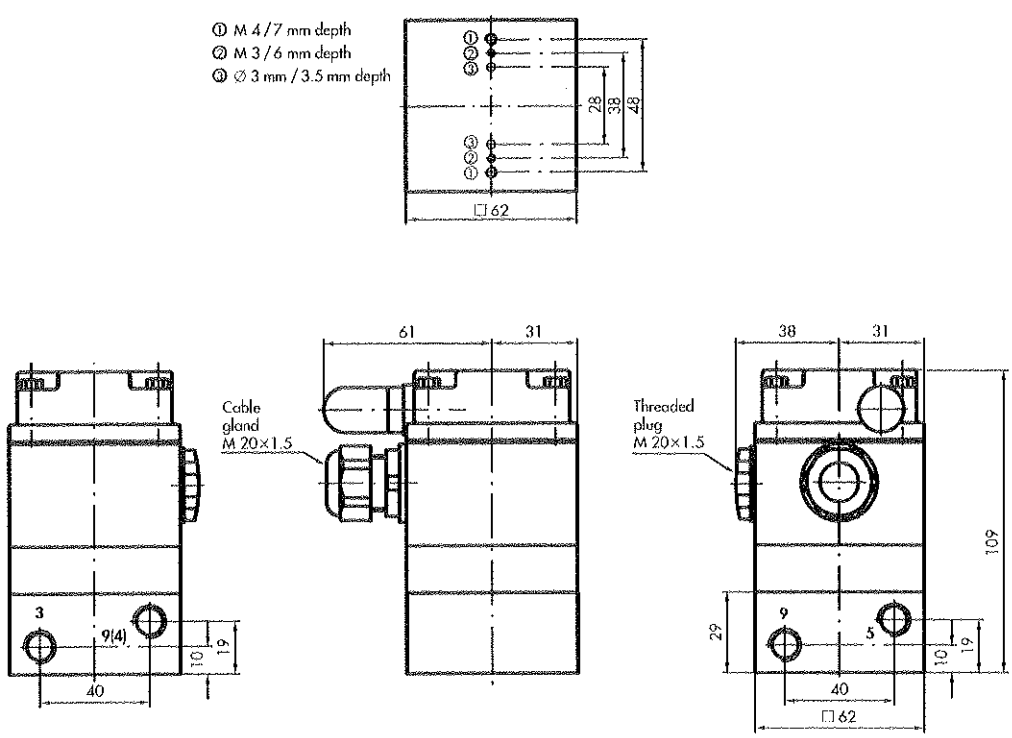

Connection 9 on Types 3963-XX27/-XX28
Connection 4 on Type 3963-XX54

Connections 5 and 9 only on Type 3963-XX54

Fig. 20 · Dimensions in mm

Dimensions of devices with threaded connection (continued from page 12)

Type 3963-XX64 Solenoid Valve

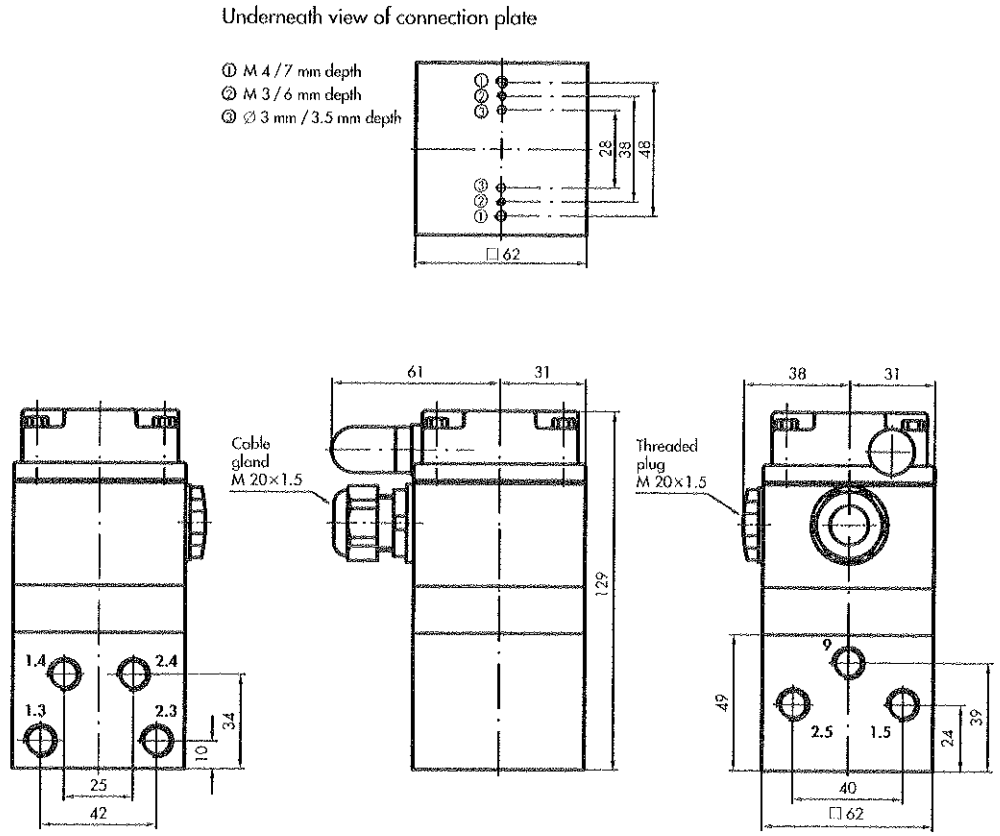

Fig. 21 · Dimensions in mm

Types 3963-XX29/-XX55 Solenoid Valves

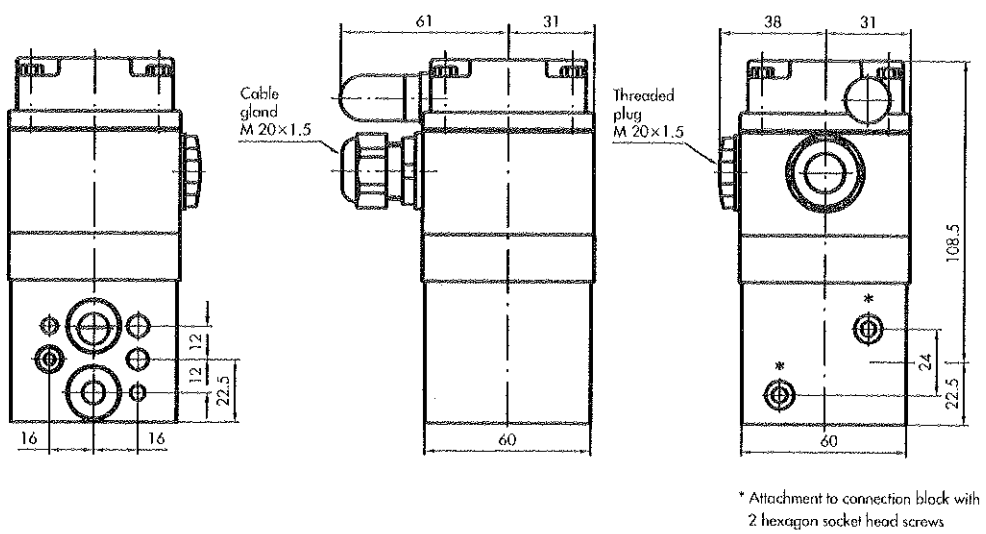

* Attachment to connection block with 2 hexagon socket head screws

Fig. 22 · Dimensions in mm

Dimensions of devices with threaded connection (continued from page 13)

Type 3963-XX25 Pilot Valve ① combined with Type 3756-X203/-X213 Booster Valve ②

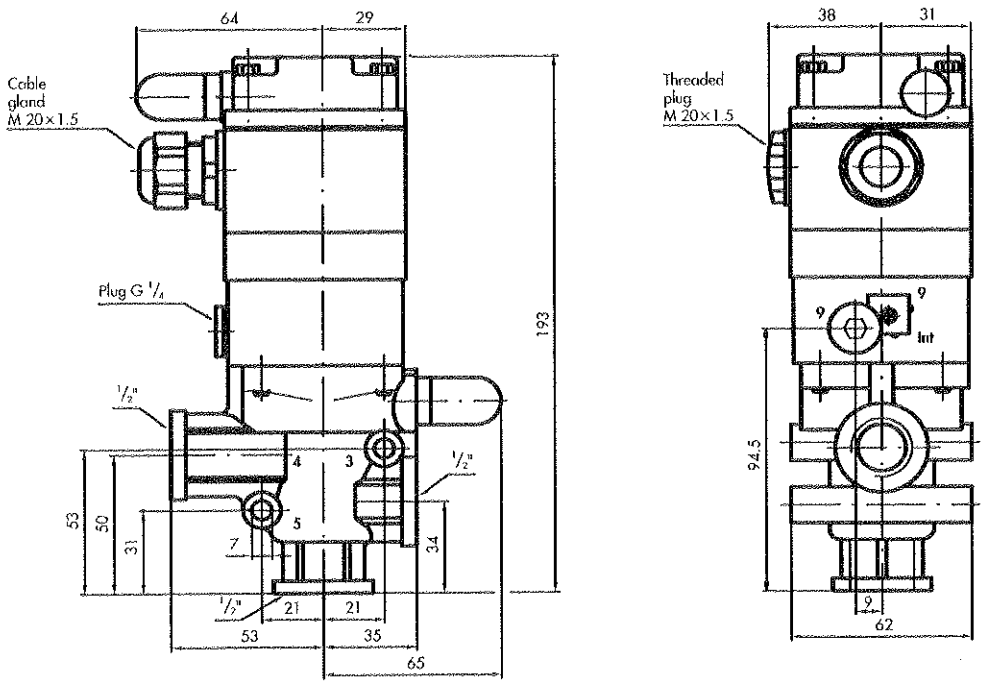

Fig. 23 · Dimensions in mm

Dimensions of devices with threaded connection (continued from page 14)

Type 3963-XX25 Pilot Valve ① combined with Type 3756-X209 Booster Valve ②

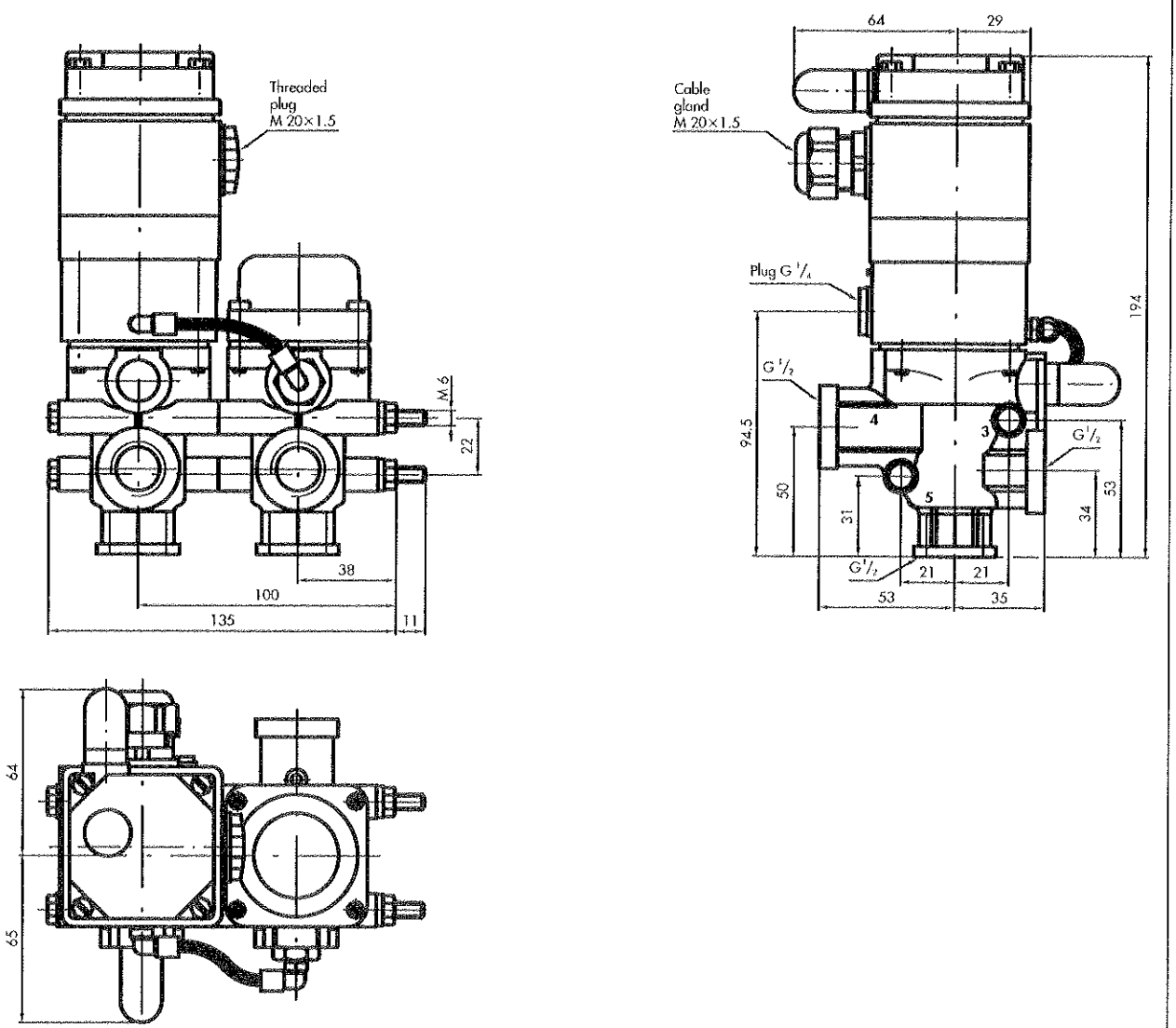

Fig. 24 · Dimensions in mm

Dimensions of devices with threaded connection (continued from page 15)

Type 3963-XX25 Pilot Valve ① combined with Type 3756-X210 Booster Valve ②

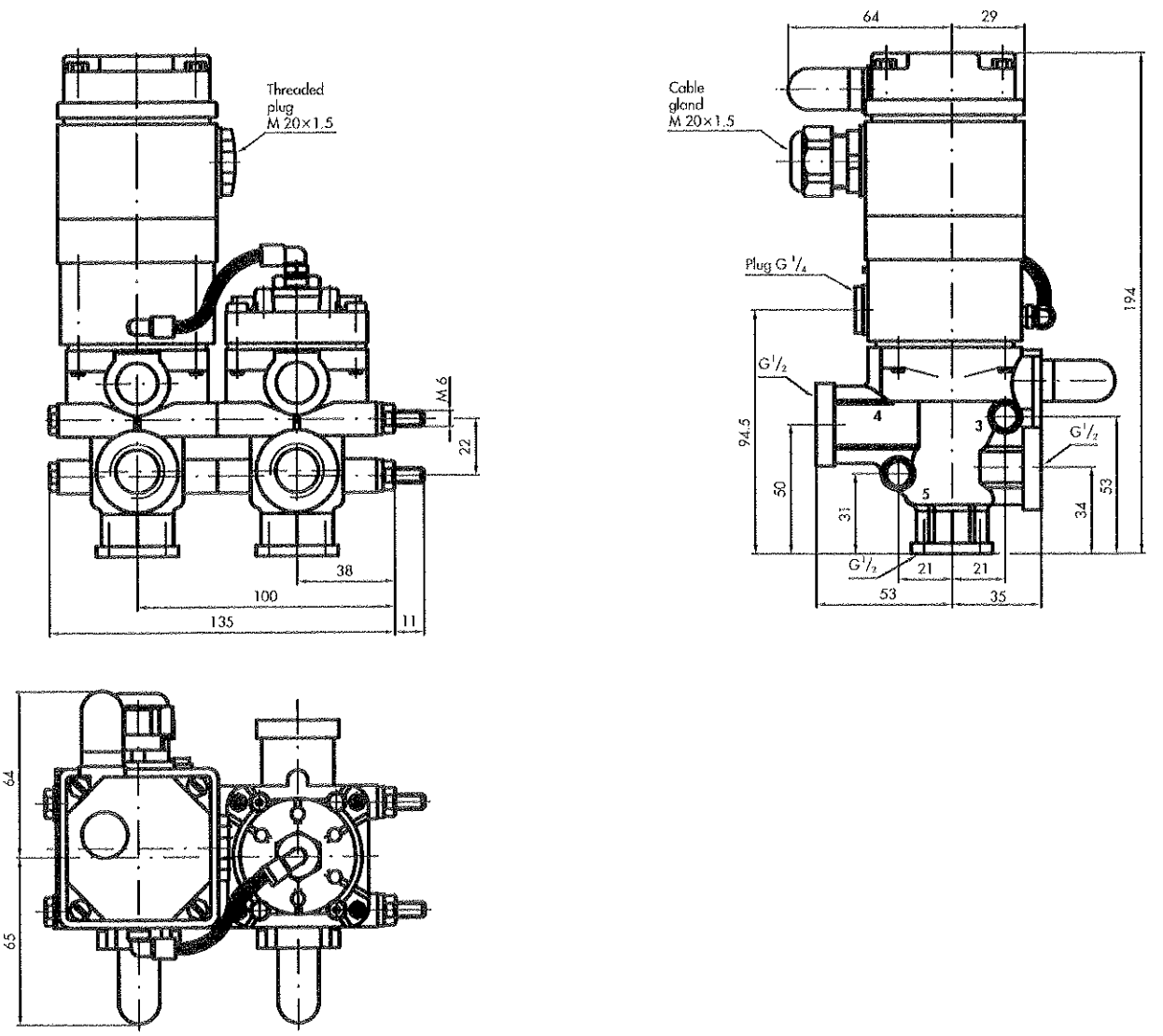

Fig. 25 · Dimensions in mm

Dimensions of devices with threaded connection (continued from page 16)

Type 3963-XX76 Pilot Valve ① combined with Type 3756-X205/-X206 Booster Valve ②

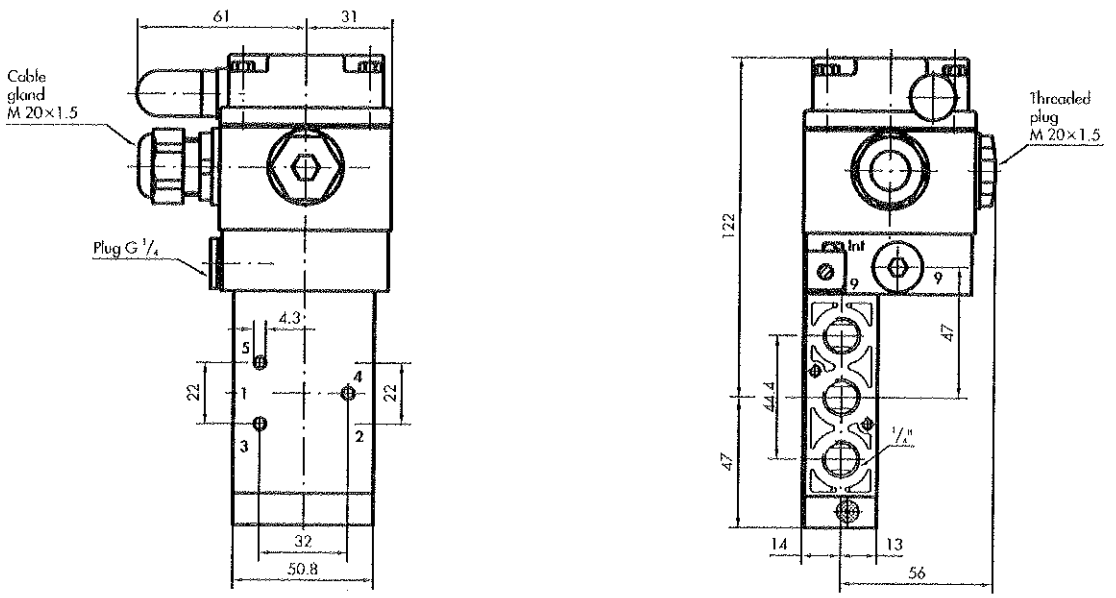

Connection 5 is closed on Type 3756-X206

Fig. 26 · Dimensions in mm

Type 3963-XX76 Pilot Valve ① combined with Type 3756-X325/-X335/-X345/-X355 Booster Valve ②

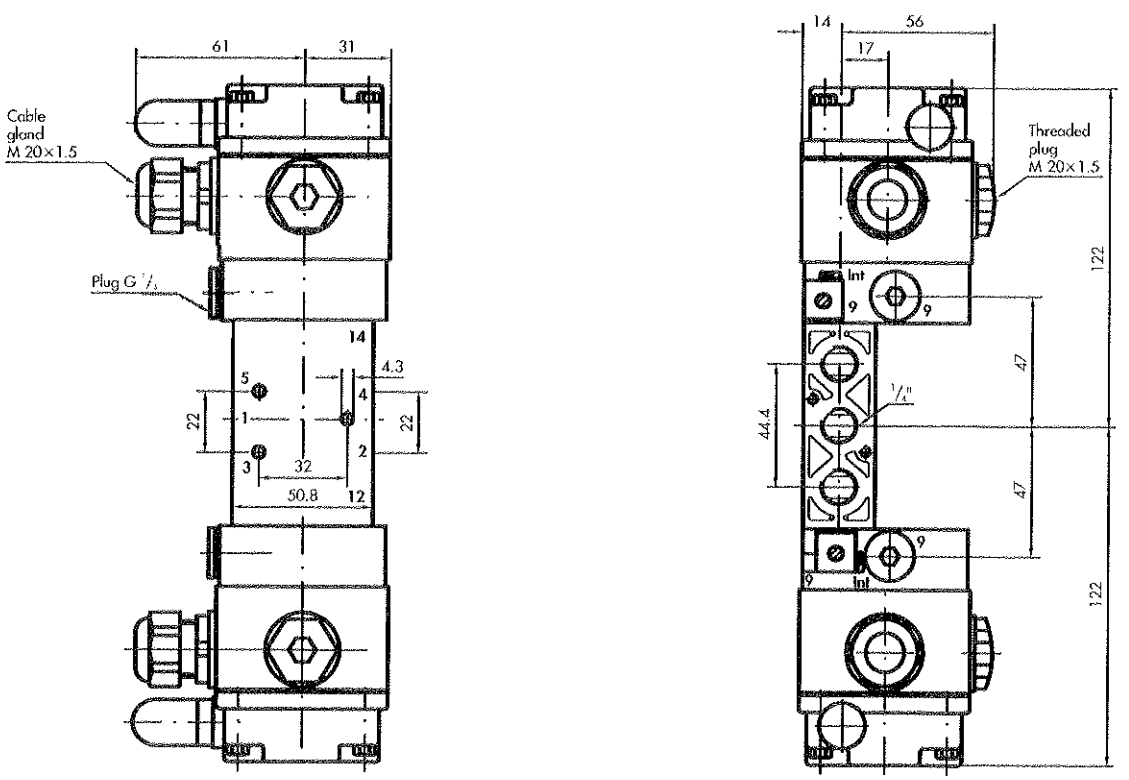

Fig. 27 · Dimensions in mm

Dimensions of devices with threaded connection for linear actuators with NAMUR rib

Type 3963-XX53 Solenoid Valve

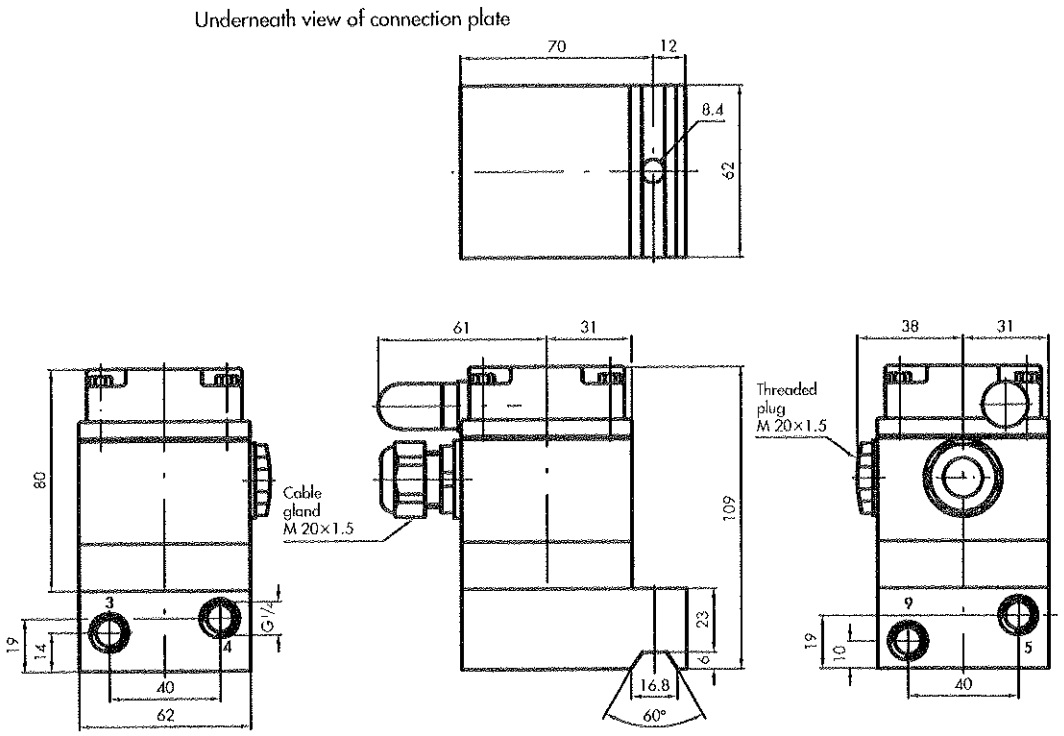

Fig. 28 · Dimensions in mm

Adapter plate NAMUR rib/NAMUR interface (Order No. 1400-6751)

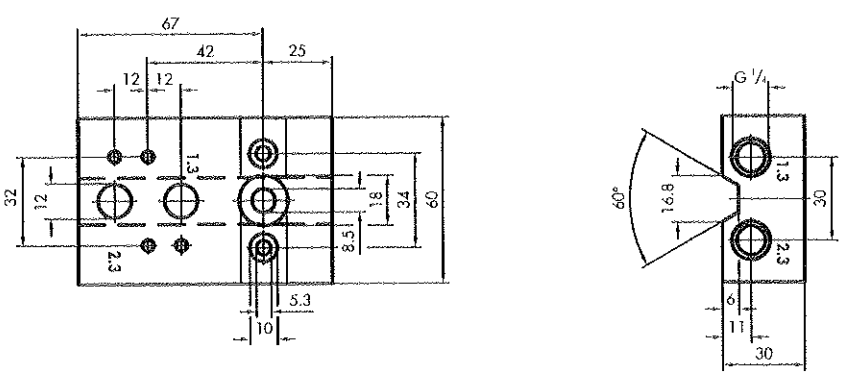

Fig. 29 · Dimensions in mm

Dimensions of devices with NAMUR interface for rotary actuators

Types 3963-XX11/-XX12/-XX21/-XX22 Solenoid Valves

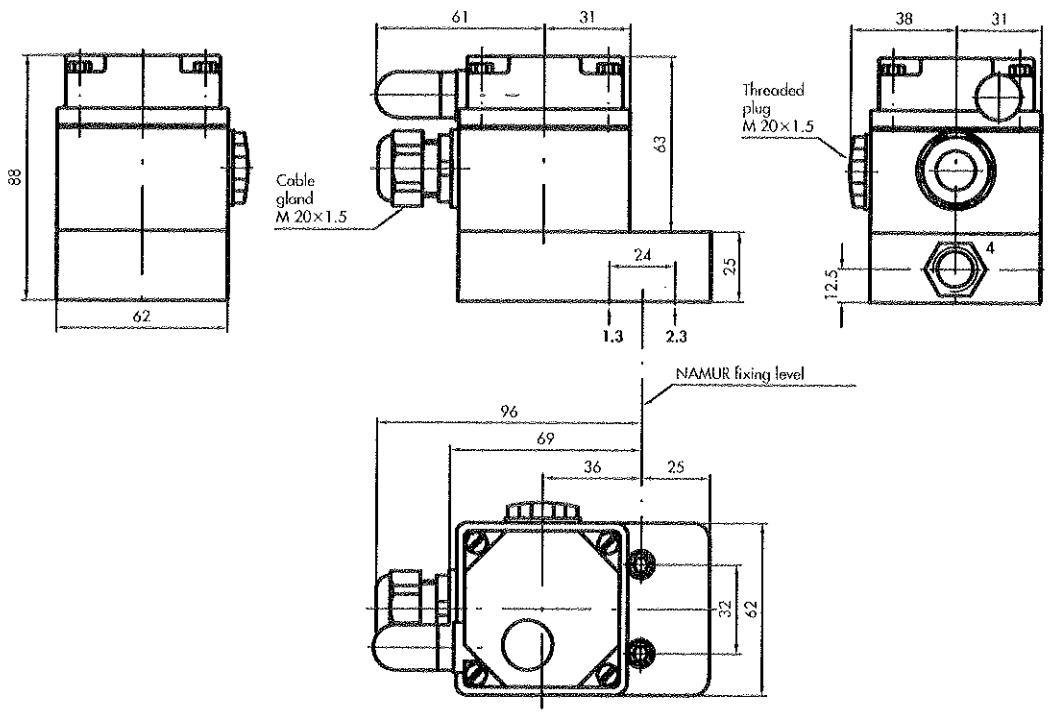

Fig. 30 · Dimensions in mm

Type 3963-XX52 Solenoid Valve

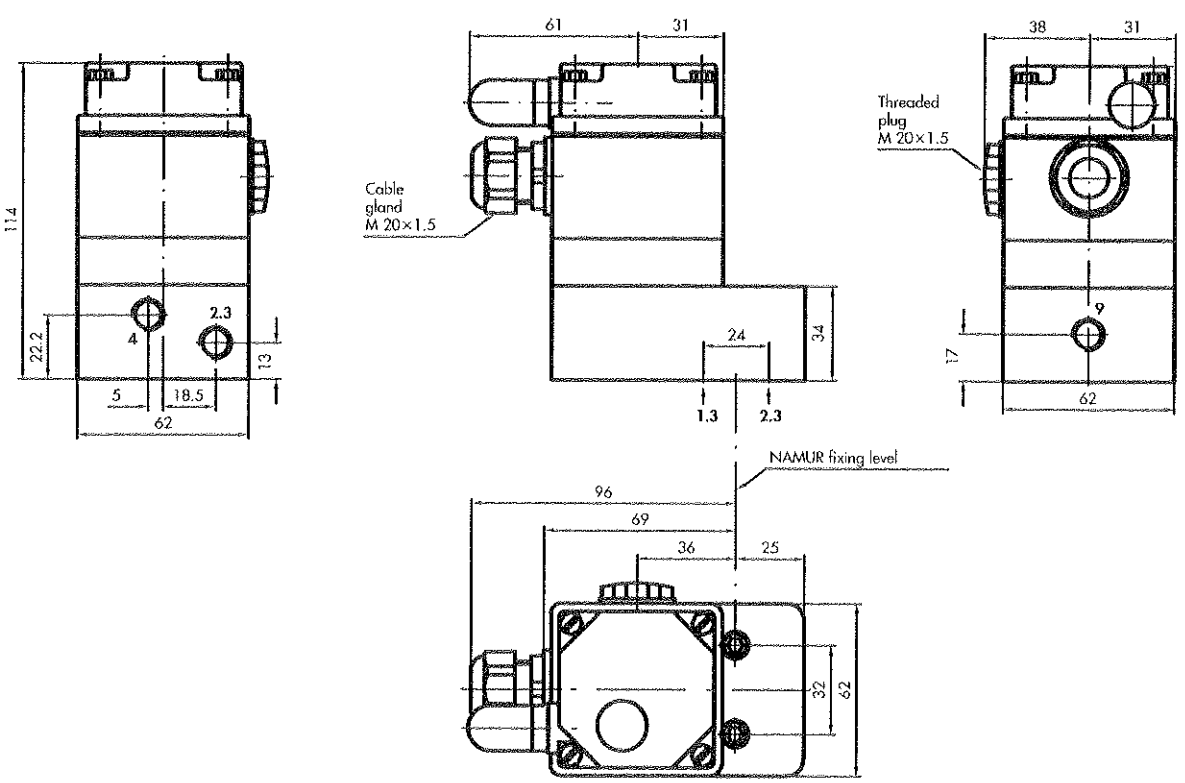

Fig. 31 · Dimensions in mm

Dimensions of devices with NAMUR interface for rotary actuators (continued from page 19)

Type 3963-XX62 Solenoid Valve

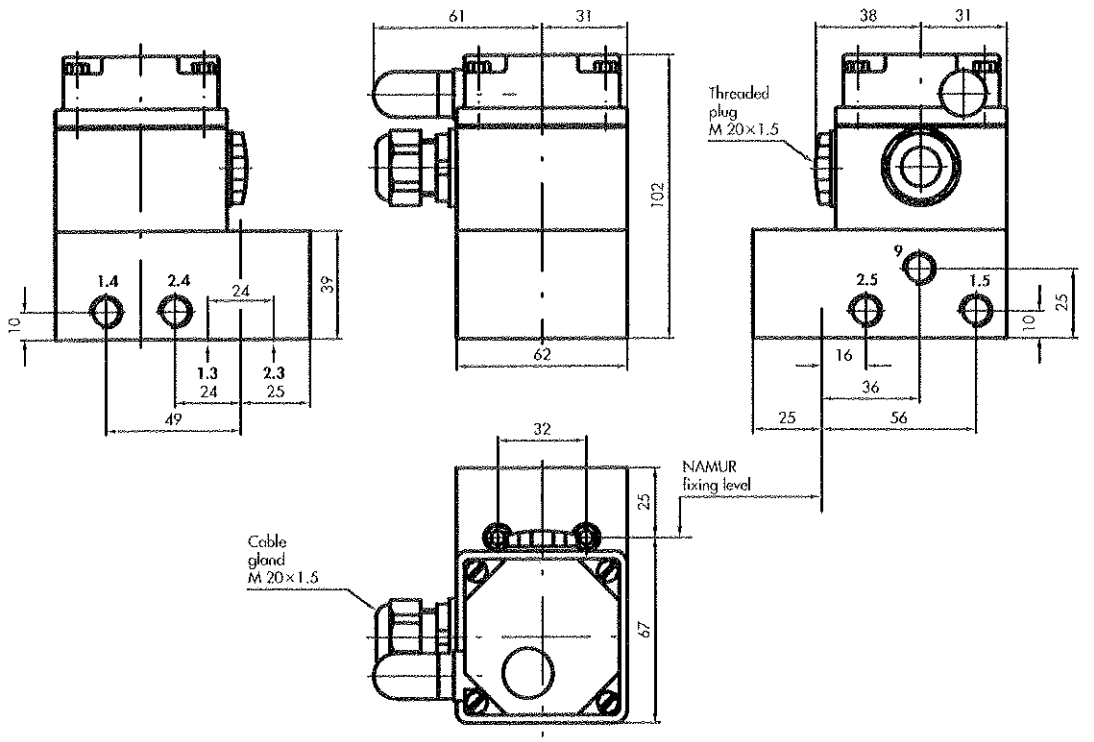

Fig. 32 · Dimensions in mm

Type 3963-XX76 Pilot Valve ① combined with Type 3756-X207/-X208 Booster Valve ②

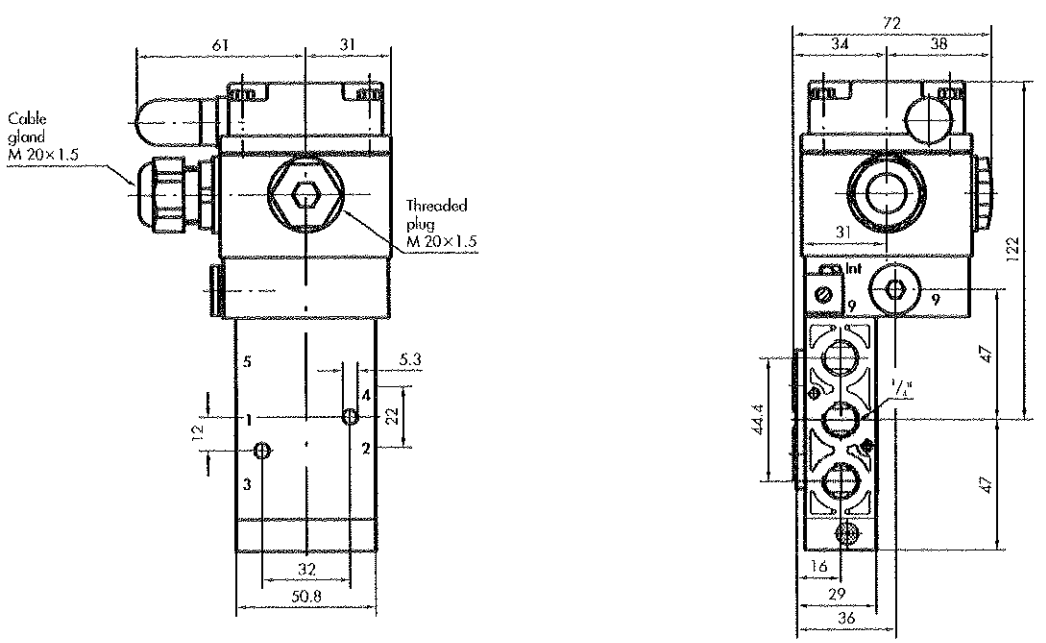

Connection 5 is closed on Type 3756-X208

Fig. 33 · Dimensions in mm

Dimensions of devices with NAMUR interface for rotary actuators (continued from page 20)

Type 3963-XX76 Pilot Valve ① combined with Type 3756-X207 Booster Valve ② and restrictor block (Order No. 1400-6763) for single-acting rotary actuators with NAMUR interface

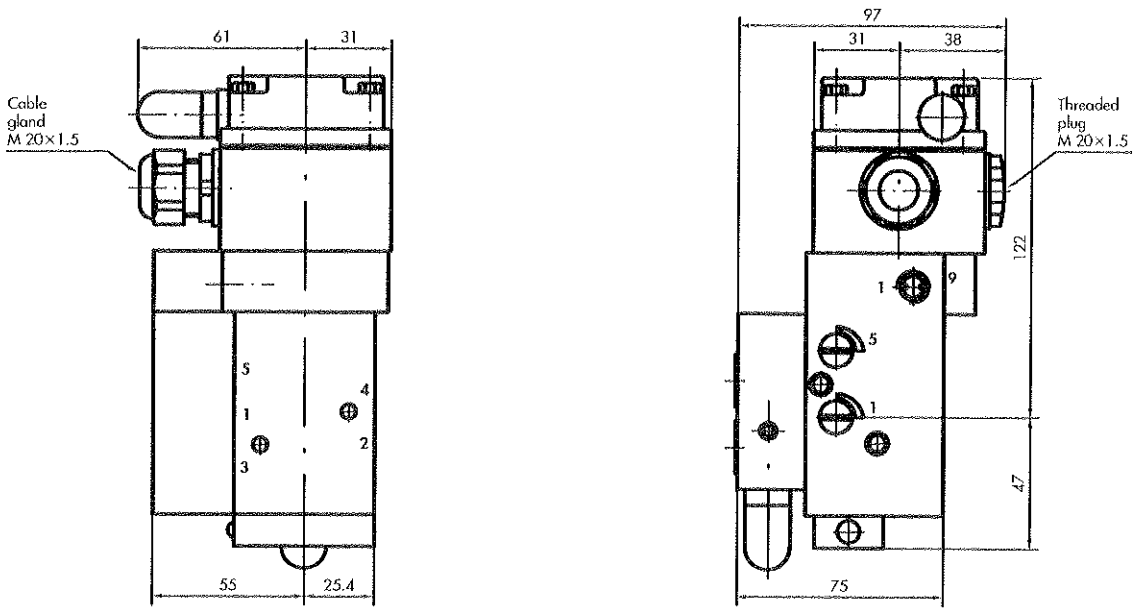

Fig. 34 · Dimensions in mm

Type 3963-XX76 Pilot Valve ① combined with Type 3756-X327/-X337/-X347/-X357 Booster Valve ②

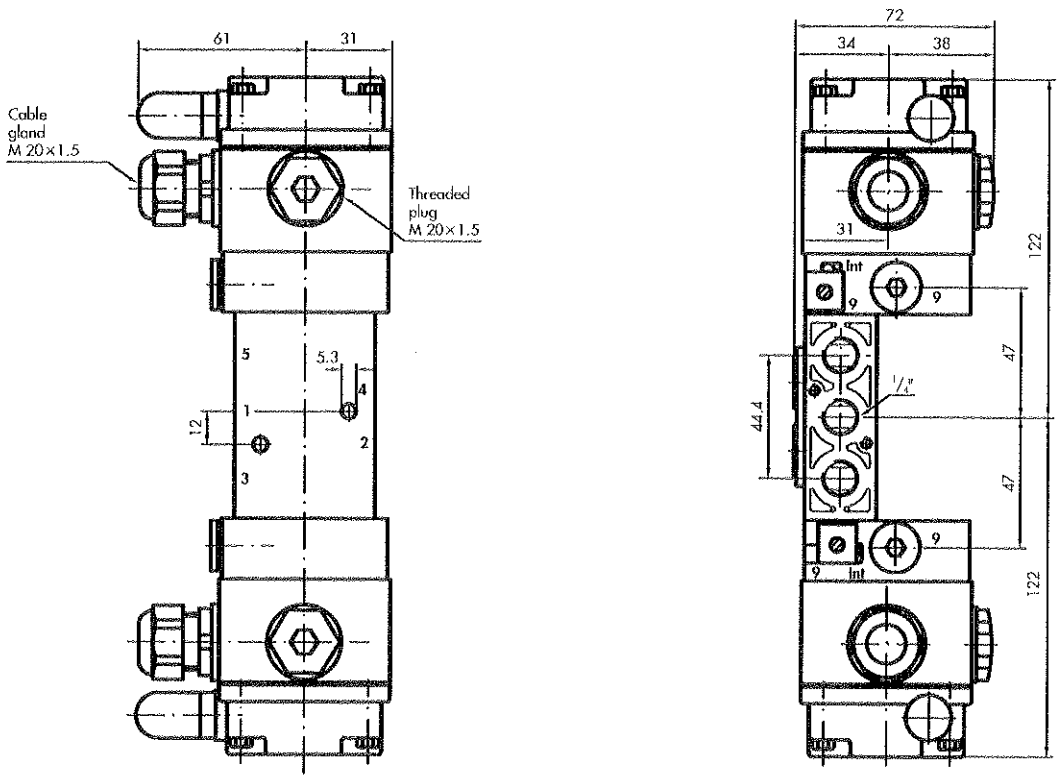

Fig. 35 · Dimensions in mm

Versions and ordering data

Type 3963 Solenoid Valve
(Connection G (NPT) $^1/_4$, K_{vs} value 0.16 or 0.32)

Solenoid valve			Order No. 3963-	.	.	. .	.	.	.
Type of protection	Without explosion protection (for DC nominal signal)			0					
	II 2 G EEx ia IIC T6 [1] (for DC nominal signal)			1					
	Without explosion protection (for AC nominal signal)			2					
	CSA/FM (for DC nominal signal)			3					
	II 3 G EEx nA II T6 [2] (for DC nominal signal)			8					
Nominal signal	6 V DC, power consumption 5.47 mW				1				
	12 V DC, power consumption 13.05 mW				2				
	24 V DC, power consumption 26.71 mW				3				
	230 V AC, power consumption 0.46 VA (without explosion protection)			2	1				
	115 V AC, power consumption 0.17 VA (without explosion protection)			2	2				
	48 V AC, power consumption 0.07 VA (without explosion protection)			2	3				
	24 V AC, power consumption 0.04 VA (without explosion protection)			2	4				
	Special version				9				
Version	K_{vs} value [3]	Connection/attachment							
3/2-way function	0.16	Without connection plate (as spare part for Type 3963-XX27)				20			
		NAMUR interface for on-off rotary actuators	TÜV [4]			21			
		NAMUR interface for on-off rotary actuators, with exhaust air restrictor				22			
		NAMUR interface for on-off/continuous rotary actuators, with supply air/exhaust air restrictors				23			
		Threaded connection (as E/P binary converter)	TÜV [4]			27			
		Threaded connection, with exhaust air restrictor (as E/P binary converter)				28			
		Connection block for Type 3277 Linear Actuator with Types 3766/3767/378X Positioner, with exhaust air restrictor				29			
3/2-way function	0.32	Without connection plate (as spare part for Types 3963-XX52/-XX53/-XX54/-XX55)				50			
		NAMUR interface for on-off/continuous rotary actuators	TÜV [4]			52			
		For linear actuators with NAMUR rib	TÜV [4]			53			
		Threaded connection, connection as desired	TÜV [4]			54			
		Connection block for Type 3277 Linear Actuator with Types 3766/3767/378X Positioner	TÜV [4]			55			
5/2-way function	0.16	Without connection plate (as spare part for Type 3963-XX14)				10			
		NAMUR interface for on-off rotary actuators				11			
		NAMUR interface for on-off rotary actuators, with 2 exhaust air restrictors				12			
		Threaded connection, connection as desired				14			
6/2-way function	0.16	Without connection plate (as spare part for Types 3963-XX62/-XX64)				60			
		NAMUR interface for on-off/continuous rotary actuators				62			
		Threaded connection, connection as desired				64			
Ambient temperature [5]	−25 to +80 °C [6]						0		
	−45 to +80 °C						1		
Electrical connection	Cable gland M 20 × 1.5 made of polyamide, black							0	
	Cable gland M 20 × 1.5 made of polyamide, blue							1	
	Adapter M 20 × 1.5/NPT $^1/_2$ made of aluminum, powder-coated, grayish beige RAL 1019							2	
	Han 7 D male connector (manufactured by Harting), 7 poles, made of aluminum, silvery gray, IP 65 [7]							3	
	Round plug connector M 12 × 1, 4 poles, made of brass, nickel-plated, IP 65 [7]							4	
	Male connector according to EN 175301-803, type A, made of polyamide, black, IP 65 [7]							5	
	Round plug connector (manufactured by Binder), 7 poles, made of PBT GV, black, IP 67 [7]							6	
	EExe cable gland M 20 × 1.5 (manufactured by CEAG) made of polyamide, black							7	
	Cable gland M 20 × 1.5 made of brass, nickel-plated (required for Type 3963-8XXX1)							8	
	Special version							9	
Air connection	Without threaded connection (for Types 3963-XX10/-XX20/-XX29/-XX50/-XX55/-XX60)								0
	G $^1/_4$								1
	NPT $^1/_4$								2
Manual override	None									0
Degree of protection IP 54 [6] with filter made of polyethylene	Pushbutton switch, screwdriver-actuated, accessible from outside									1
	Pushbutton, pin-actuated, accessible from outside									2
	Pushbutton underneath enclosure cover [8]									3
Degree of protection IP 65 with filter check valve made of polyamide [9]	None									4
	Pushbutton switch, screwdriver-actuated, accessible from outside									5
	Pushbutton, pin-actuated, accessible from outside									6
	Pushbutton underneath enclosure cover [8]									7

[1] According to EC-type-examination Certificate PTB 01 ATEX 2085.
[2] According to Statement of Conformity PTB 01 ATEX 2086X.
[3] Air flow at $p_1 = 2.4$ bar and $p_2 = 1.0$ bar can be calculated according to the following equation: $Q = K_{vs} \times 36.22$, expressed in m^3/h.
[4] Report No. S63/00 (used on control valves according to DIN 3394 Part 1, DIN EN 161, DIN 32725, DIN EN 264 and DIN 32730), Report No. S64/00 (safety function up to class AK 7 according to DIN V 19251).
[5] Permissible maximum ambient temperature for EExi versions according to temperature classes T4/T5/T6 (see EC-type-examination certificate).
[6] Silicone-free version with degree of protection IP 54 at permissible ambient temperature from −25 to +80 °C on request.
[7] The female connector is not delivered with the device (see "Accessories and spare parts").
[8] Manual override lever accessible from outside on request.
[9] Filter check valve made of stainless steel with degree of protection IP 65 or NEMA 4 on request.

Versions and ordering data (continued from page 22)

Type 3963 Pilot Valve ① with single-actuated Type 3756 Booster Valve ②
(Connection G (NPT) 1/4 or 1/4/NAMUR or 1/2, K_{vs} value 1.4 or 4.3)

Pilot valve ①		Order No. 3963-	.	.	. .	.	.	.	/3756-	.	.	.	.
Type of protection	Without explosion protection (for DC nominal signal)		0										
	II 2 G EEx ia IIC T6[1] (for DC nominal signal)		1										
	Without explosion protection (for AC nominal signal)		2										
	CSA/FM (for DC nominal signal)		3										
	II 3 G EEx nA II T6[2] (for DC nominal signal)		8										
Nominal signal	6 V DC, power consumption 5.47 mW			1									
	12 V DC, power consumption 13.05 mW			2									
	24 V DC, power consumption 26.71 mW			3									
	230 V AC, power consumption 0.46 VA (without explosion protection)		2	1									
	115 V AC, power consumption 0.17 VA (without explosion protection)		2	2									
	48 V AC, power consumption 0.07 VA (without explosion protection)		2	3									
	24 V AC, power consumption 0.04 VA (without explosion protection)		2	4									
	Special version			9									
Version 3/2-way function	K_{vs} value[3] / Connection/attachment												
	0.01 For Types 3756-X205/-X206/-X207/-X208 Booster Valves ② TÜV[4]				76								
	0.16 For Types 3756-X203/-X213/-X209/-X210 Booster Valves ② TÜV[4]				25								
Ambient temperature[5]	−25 to +80 °C[6]					0							
	−45 to +80 °C					1							
Electrical connection	Cable gland M 20 × 1.5 made of polyamide, black						0						
	Cable gland M 20 × 1.5 made of polyamide, blue						1						
	Adapter M 20 × 1.5/NPT 1/2 made of aluminum, powder-coated, grayish beige RAL 1019						2						
	Han 7 D male connector (manufactured by Harting), 7 poles, made of aluminum, silvery gray, IP 65[7]						3						
	Round plug connector M 12 × 1, 4 poles, made of brass, nickel-plated, IP 65[7]						4						
	Male connector according to EN 175301-803, type A, made of polyamide, black, IP 65[7]						5						
	Round plug connector (manufactured by Binder), 7 poles, made of PBT GV, black, IP 67[7]						6						
	EExe cable gland M 20 × 1.5 (manufactured by CEAG) made of polyamide, black						7						
	Cable gland M 20 × 1.5 made of brass, nickel-plated (required for Type 3963-8XXX1)						8						
	Special version						9						
Air connection	Without threaded connection							0					
Manual override	None								0				
Degree of protection IP 54[6] with filter made of polyethylene	Pushbutton switch, screwdriver-actuated, accessible from outside								1				
	Pushbutton, pin-actuated, accessible from outside								2				
	Pushbutton underneath enclosure cover[8]								3				
Degree of protection IP 65 with filter check valve made of polyamide[9]	None								4				
	Pushbutton switch, screwdriver-actuated, accessible from outside								5				
	Pushbutton, pin-actuated, accessible from outside								6				
	Pushbutton underneath enclosure cover[8]								7				

Booster valve ②, single-actuated						Order No. 3756-	.	.	.	.
Actuation	Version	Operating pressure (in direction of flow)	K_{vs} value[3] (in direction of flow)	Ambient temperature	Air connection					
Type 3963-XX25 Pilot Valve ①	3/2-way function	max. 10 bar (3→5, 4→3) max. 2 bar (as desired)	1.9 (4→3), 1.5 (3→4) 4.3 (3→5), 4.7 (5→3)	−25 to +80 °C	G 1/2	TÜV[4]	1	2	0	3
					NPT 1/2	TÜV[4]	6	2	0	3
				−40 to +80 °C	G 1/2	TÜV[4]	1	2	1	3
					NPT 1/2	TÜV[4]	6	2	1	3
	5/2-way function	max. 10 bar (at 4) max. 2 bar (as desired)	1.9 (4→3), 1.5 (3→4) 4.3 (3→5), 4.7 (5→3)	−25 to +80 °C	G 1/2		1	2	0	9
					NPT 1/2		6	2	0	9
	6/2-way function	max. 10 bar (at 4) max. 2 bar (as desired)	1.9 (4→3), 1.5 (3→4) 4.3 (3→5), 4.7 (5→3)	−25 to +80 °C	G 1/2		1	2	1	0
					NPT 1/2		6	2	1	0
Type 3963-XX76 Pilot Valve ①	5/2-way function	max. 10 bar (as desired)	1.4 (as desired)	−40 to +80 °C	G 1/4		3	2	0	5
					NPT 1/4		8	2	0	5
	3/2-way function with exhaust air return	max. 10 bar (as desired)	1.4 (as desired)	−40 to +80 °C	G 1/4	TÜV[4]	3	2	0	6
					NPT 1/4	TÜV[4]	8	2	0	6
	5/2-way function	max. 10 bar (as desired)	1.4 (as desired)	−40 to +80 °C	G 1/4/NAMUR		3	2	0	7
					NPT 1/4/NAMUR		8	2	0	7
	3/2-way function with exhaust air return	max. 10 bar (as desired)	1.4 (as desired)	−40 to +80 °C	G 1/4/NAMUR	TÜV[4]	3	2	0	8
					NPT 1/4/NAMUR	TÜV[4]	8	2	0	8

[1] According to EC-type-examination Certificate PTB 01 ATEX 2085.
[2] According to Statement of Conformity PTB 01 ATEX 2086X.
[3] Air flow at $p_1 = 2.4$ bar and $p_2 = 1.0$ bar can be calculated according to the following equation: $Q = K_{vs} \times 36.22$, expressed in m^3/h.
[4] Report No. S63/00 (used on control valves according to DIN 3394 Part 1, DIN EN 161, DIN 32725, DIN EN 264 and DIN 32730), Report No. S64/00 (safety function up to class AK 7 according to DIN V 19251).
[5] Permissible maximum ambient temperature for EExi versions according to temperature classes T4/T5/T6 (see EC-type-examination certificate).
[6] Silicone-free version with degree of protection IP 54 at permissible maximum ambient temperature from −25 to +80 °C on request.
[7] The female connector is not delivered with the device (see "Accessories and spare parts").
[8] Manual override lever accessible from outside on request.
[9] Filter check valve made of stainless steel with degree of protection IP 65 or NEMA 4 on request.

Versions and ordering data (continued from page 23)

Type 3963 Pilot Valves ① with double-actuated Type 3756 Booster Valve ②
(Connection G (NPT) 1/4 or 1/4/NAMUR, K_{vs} value 1.4)

Pilot valves ①		Order No. 3963-	.	.	76	.	.	.	.	/3756-	.	.	.	.
Type of protection	Without explosion protection (for DC nominal signal)	0												
	II 2 G EEx ia IIC T6[1] (for DC nominal signal)	1												
	Without explosion protection (for AC nominal signal)	2												
	CSA/FM (for DC nominal signal)	3												
	II 3 G EEx nA II T6[2] (for DC nominal signal)	8												
Nominal signal	6 V DC, power consumption 5.47 mW		1											
	12 V DC, power consumption 13.05 mW		2											
	24 V DC, power consumption 26.71 mW		3											
	230 V AC, power consumption 0.46 VA (without explosion protection)		2	1										
	115 V AC, power consumption 0.17 VA (without explosion protection)		2	2										
	48 V AC, power consumption 0.07 VA (without explosion protection)		2	3										
	24 V AC, power consumption 0.04 VA (without explosion protection)		2	4										
	Special version			9										
Version	K_{vs} value[3] / Connection/attachment													
3/2-way function	0.01 / For booster valve ② TÜV[4]				76									
Ambient temperature[4]	−25 to +80 °C[6]					0								
	−45 to +80 °C					1								
Electrical connection	Cable gland M 20 × 1.5 made of polyamide, black						0							
	Cable gland M 20 × 1.5 made of polyamide, blue						1							
	Adapter M 20 × 1.5/NPT 1/2 made of aluminum, powder-coated, grayish beige RAL 1019						2							
	Han 7 D male connector (manufactured by Harting), 7 poles, made of aluminum, silvery gray, IP 65[7]						3							
	Round plug connector M 12 × 1, 4 poles, made of brass, nickel-plated, IP 65[7]						4							
	Male connector according to EN 175301-803, type A, made of polyamide, black, IP 65[7]						5							
	Round plug connector (manufactured by Binder), 7 poles, made of PBT GV, black, IP 67[7]						6							
	EExe cable gland M 20 × 1.5 (manufactured by CEAG) made of polyamide, black						7							
	Cable gland M 20 × 1.5 made of brass, nickel-plated (required for Type 3963-8XXX1)						8							
	Special version						9							
Air connection	Without threaded connection							0						
Manual override	None								0					
Degree of protection IP 54[6] with filter made of polyethylene	Pushbutton switch, screwdriver-actuated, accessible from outside								1					
	Pushbutton, pin-actuated, accessible from outside								2					
	Pushbutton underneath enclosure cover[8]								3					
Degree of protection IP65 with filter check valve made of polyamide[9]	None								4					
	Pushbutton switch, screwdriver-actuated, accessible from outside								5					
	Pushbutton, pin-actuated, accessible from outside								6					
	Pushbutton underneath enclosure cover[8]								7					

Booster valve ②, double-actuated				Order No. 3756-	.	.	.	.
Version	**Operating pressure** (in direction of flow)	**K_{vs} value**[3] (in direction of flow)	**Ambient temperature**	**Air connection**				
5/2-way function, detented (two positions)	max. 10 bar (as desired)	1.4 (as desired)	−40 to +80 °C	G 1/4 TÜV[4]	3	3	2	5
				NPT 1/4 TÜV[4]	8	3	2	5
				G 1/4/NAMUR TÜV[4]	3	3	2	7
				NPT 1/4/NAMUR TÜV[4]	8	3	2	7
5/3-way function, spring-centered (ports 2 and 4 closed)	max. 10 bar (as desired)	1.4 (as desired)	−40 to +80 °C	G 1/4	3	3	3	5
				NPT 1/4	8	3	3	5
				G 1/4/NAMUR	3	3	3	7
				NPT 1/4/NAMUR	8	3	3	7
5/3-way function, spring-centered (ports 2 and 4 vented)	max. 10 bar (as desired)	1.4 (as desired)	−40 to +80 °C	G 1/4 TÜV[4]	3	3	4	5
				NPT 1/4 TÜV[4]	8	3	4	5
				G 1/4/NAMUR TÜV[4]	3	3	4	7
				NPT 1/4/NAMUR TÜV[4]	8	3	4	7
5/3-way function, spring-centered (ports 2 and 4 to air supply)	max. 10 bar (as desired)	1.4 (as desired)	−40 to +80 °C	G 1/4	3	3	5	5
				NPT 1/4	8	3	5	5
				G 1/4/NAMUR	3	3	5	7
				NPT 1/4/NAMUR	8	3	5	7

[1] According to EC-type-examination Certificate PTB 01 ATEX 2085.
[2] According to Statement of Conformity PTB 01 ATEX 2086X.
[3] Air flow at $p_1 = 2.4$ bar and $p_2 = 1.0$ bar can be calculated according to the following equation: $Q = K_{vs} \times 36.22$, expressed in m^3/h.
[4] Report No. S63/00 (used on control valves according to DIN 3394 Part 1, DIN EN 161, DIN 32725, DIN EN 264 and DIN 32730), Report No. S64/00 (safety function up to class AK 7 according to DIN V 19251).
[5] Permissible maximum ambient temperature for EExi versions according to temperature classes T4/T5/T6 (see EC-type-examination certificate).
[6] Silicone-free version with degree of protection IP 54 at permissible maximum ambient temperature from −25 to +80 °C on request.
[7] The female connector is not delivered with the device (see "Accessories and spare parts").
[8] Manual override lever accessible from outside on request.
[9] Filter check valve made of stainless steel with degree of protection IP 65 or NEMA 4 on request.

Spare parts and accessories

Spare parts for Type 3963 Solenoid Valves, Type 3963 Pilot Valves and Type 3756 Booster Valves	
Order No.	**Designation**
0439-0088	Flat gasket (for connection plate for Type 3963, not for Types 3963-XX11/-XX21)
8205-1090	Molded gasket (for air supply for Types 3756-X205/-X206/-X207/-X208)
0520-0620	Diaphragm made of chloroprene, −25 to +80 °C (for Types 3756-1203/-6203)
0520-0622	Diaphragm made of chloroprene, −25 to +80 °C (for Type 3963, not for Type 3963-XX76)
0520-1097	Diaphragm made of silicone rubber, −40 to +80 °C (for Type 3963, not for Type 3963-XX76)
0520-1128	Diaphragm made of silicone rubber, −40 to +80 °C (for Types 3756-1203/-6203)
1180-8311	Actuating element insert, −25 to +80 °C (for Types 3756-1203/-6203/-1213/-6213)
1180-8553	Actuating element insert, −40 to +80 °C (for Types 3756-1203/-6203/-1213/-6213)
8421-0021	O-ring 2 × 1 (for connection plate for Types 3756-XXX5/-XXX6/-XXX7/-XXX8)
8421-0308	O-ring 11 × 4,5 (for NAMUR interface for Types 3756-X207/-X208)
8421-9002	O-ring 16 × 2 (for NAMUR interface for Types 3963-XX11/-XX21/-XX52/-XX62)
8421-0085	O-ring 26 × 2, −25 to +80 °C (for Types 3756-1203/-6203/-1213/-6213)
8421-0418	O-ring 26 × 2, −40 to +80 °C (for Types 3756-1203/-6203/-1213/-6213)
8421-0102	O-ring 36 × 2, −25 to +80 °C (for Types 3756-1203/-6203/-1213/-6213)
8421-0101	O-ring 36 × 2, −40 to +80 °C (for Types 3756-1203/-6203/-1213/-6213)
	Enclosure cover without filter (for Type 3963)
1099-0673	without manual override
1099-0674	with pushbutton switch, screwdriver-actuated, accessible from outside
1099-0675	with pushbutton, pin-actuated, accessible from outside
1099-1194	with lever switch, accessible from outside
8323-0032	Plug G $^1/_4$ made of stainless steel (for connection 9 on Type 3963)
8414-0140	Seal ring (for plug G $^1/_4$)

Accessories for Type 3963 Solenoid Valves, Type 3963 Pilot Valves and Type 3756 Booster Valves	
Order No.	**Designation**
0790-6658	Female connector according to EN 175301-803, type A, made of polyamide, black, IP 65
1400-8298	Female connector (manufactured by Harting), 7 poles, made of aluminum, silvery gray, IP 65
8801-2810	Sensor connecting cable, 2 wires, length 3 m, blue, with angle connection M 12 × 1, 4 poles, IP 68
8831-0716	Female connector (manufactured by Binder), 7 poles, made of PBT GV, black, IP 67
8831-0865	Female connector M 12 × 1, 4 poles, angle type, made of polyamide, black, IP 67
3994-0158	Cable break protection device with enclosure for top hat rail 35, IP 20
	(for Type 3963-X1 with 6 V DC solenoid)
1400-5268	Filter made of polyethylene, connection G 1/G $^1/_2$, IP 54 (required for actuator size > 1 400 cm²!)
8504-0066	Filter made of polyethylene, connection G $^1/_4$, IP 54
8504-0068	Filter made of polyethylene, connection G $^1/_2$, IP 54
	Filter check valves made of polyamide or stainless steel, IP 65 or NEMA 4, see Data Sheet Z 900-7 EN
1400-5930	Mounting base for G profile 32 according to EN 50035
	(for Types 3963-XX14/-XX27/-XX28/-XX54/-XX64 – 2 pieces are required!)
1400-5931	Mounting base for top hat rail 35 according to EN 50022
	(for Types 3963-XX14/-XX27/-XX28/-XX54/-XX64 – 2 pieces are required!)
1400-6726	Mounting plate for wall mounting (for Types 3963-XX14/-XX27/-XX28/-XX54/-XX64)
1400-6763	Restrictor block with 2 restrictors for supply air and exhaust air for adjusting different closing and opening times in a ratio of 1:15 (for Type 3963-X207) for single-acting rotary actuators with NAMUR interface

Connection blocks and accessories for attaching Types 3963-XX29/-XX55 Solenoid Valves to Type 3277 Linear Actuators	
Order No.	**Designation**
	Connection block for Type 3277 Linear Actuators with integral Type 3766/3767/3780 Positioner attachment
1400-6943	Actuator "Stem extends", connection G $^1/_4$
1400-6944	Actuator "Stem extends", connection NPT $^1/_4$
1400-6945	Actuator "Stem retracts", connection G $^1/_4$
1400-6946	Actuator "Stem retracts", connection NPT $^1/_4$
	Piping kit for "Stem retracts"
1400-6444	Actuator size 240 cm², made of steel, galvanised
1400-6445	Actuator size 240 cm², made of stainless steel
1400-6446	Actuator size 350 cm², made of steel, galvanised
1400-6447	Actuator size 350 cm², made of stainless steel
1400-6448	Actuator size 700 cm², made of steel, galvanised
1400-6449	Actuator size 700 cm², made of stainless steel
1400-6376	Pressure gauge, 0 to 6 bar/75 psi

Spare parts and accessories (continued from page 25)

Mounting kits for Type 3963 Solenoid Valves with threaded connection	
Order No.	**Designation**
1400-6759	Mounting kit for linear actuators (actuator size 80/240 cm², connection G 1/4) with screwed pipe connection G 1/4/G 1/4, made of stainless steel
	Mounting kit for linear actuators (actuator size 350/700 cm², connection G 3/8)
1400-6735	with screwed pipe connection G 1/2/G 3/8, made of stainless steel
1400-6761	with screwed pipe connection G 1/4/G 3/8, made of stainless steel
1400-6736	Mounting kit for linear actuators (actuator size 1 400 cm², connection G 3/4) with screwed pipe connection G 1/2/G 3/4, made of stainless steel
1400-6737	Mounting kit for linear actuators (actuator size 2 800 cm², connection G 1) with screwed pipe connection G 1/2/G 1, made of stainless steel
	Mounting kit for linear actuators (actuator size 80/240 cm², connection G 1/4) with angle bracket made of stainless steel
1400-6749	and screwed joints for pipe 8 × 1, connection G 1/4/G 1/4, made of steel, galvanised
1400-6750	and screwed joints for pipe 8 × 1, connection G 1/4/G 1/4, made of stainless steel
	Mounting kit for linear actuators (actuator size 350/700 cm², connection G 3/8) with angle bracket made of stainless steel
1400-6738	and screwed joints for pipe 8 × 1, connection G 1/4/G 3/8, made of steel, galvanised
1400-6739	and screwed joints for pipe 8 × 1, connection G 1/4/G 3/8, made of stainless steel
1400-6743	and screwed joints for pipe 12 × 1, connection G 1/4/G 3/8, made of stainless steel
1400-6744	and screwed joints for pipe 10 × 1, connection G 1/2/G 3/8, made of polyamide
1400-6745	and screwed joints for pipe 10 × 1, connection G 1/4/G 3/8, made of polyamide
	Mounting kit for linear actuators (actuator size 700 cm², connection G 3/8) with angle bracket made of stainless steel
1400-6740	and screwed joints for pipe 12 × 1, connection G 1/2/G 3/8, made of steel, galvanised
1400-6741	and screwed joints for pipe 12 × 1, connection G 1/4/G 3/8, made of steel, galvanised
1400-6742	and screwed joints for pipe 12 × 1, connection G 1/2/G 3/8, made of stainless steel

Mounting kits for Type 3963 Solenoid Valves with NAMUR interface	
Order No.	**Designation**
	Mounting kit for linear actuators (actuator size 350/700 cm², connection G 3/8) with NAMUR rib via adapter plate NAMUR rib/NAMUR interface (Order No. 1400-6751)
1400-6746	with screwed joints for pipe 12 × 1, connection G 1/4/G 3/8, made of steel, galvanised
1400-6747	with screwed joints for pipe 12 × 1, connection G 1/4/G 3/8, made of stainless steel
1400-6748	with screwed joints for pipe 10 × 1, connection G 1/4/G 3/8, made of polyamide
	Mounting kit for linear actuators (actuator size 80/240 cm², connection G 1/4) with NAMUR rib via adapter plate NAMUR rib/NAMUR interface (Order No. 1400-6751)
1400-6752	with screwed joints for pipe 6 × 1, connection G 1/4/G 1/4, made of steel, galvanised
1400-6753	with screwed joints for pipe 6 × 1, connection G 1/4/G 1/4, made of stainless steel
1400-6756	with screwed joints for hose 10 × 1, connection G 1/4/G 1/4, made of polyamide
	Mounting kit for linear actuators (actuator size 350/700 cm², connection G 3/8) with NAMUR rib via adapter plate NAMUR rib/NAMUR interface (Order No. 1400-6751)
1400-6754	with screwed joints for pipe 8 × 1, connection G 1/4/G 3/8, made of steel, galvanised
1400-6755	with screwed joints for pipe 8 × 1, connection G 1/4/G 3/8, made of stainless steel
1400-6757	with screwed joints for pipe 10 × 1, connection G 1/4/G 3/8, made of polyamide
1400-6759	Mounting kit for linear actuators (actuator size 80/240 cm², connection G 1/4) with screwed pipe connection G 1/4/G 1/4, made of stainless steel

Accessories for mounting kits	
Order No.	**Designation**
0320-1416	Bracket for NAMUR rib (required when a positioner or a limit switch is to be mounted to linear actuators with nominal size < DN 50 at the same time)
8320-0131	Hexagon socket head screw M 8 × 60 – A 4 DIN 931
1400-6751	Adapter plate NAMUR rib/NAMUR interface

(Specifications subject to change without notice.)

SAMSOMATIC

AUTOMATIONSSYSTEME
GMBH

– a subsidiary of SAMSON AG

Weismüllerstraße 20–22
60314 Frankfurt am Main · Germany

Phone: +49 69 4009-0
Fax: +49 69 4009-1644
E-mail: samsomatic@samson.de
Internet: http://www.samsomatic.de

2003-06 A · T 3963 EN

BOOSTER RELAY SERIES IL100

- This unit is used when a pneumatic signal which has the right pressure does not have the required flow to activate one or more pieces of equipment. The Booster Relay supplies an output pressure identical to the signal pressure but with a much larger flow capacity.
- Simultaneous pressure control of several units from a small signal flow is possible.
- When piping between signal instrumentation and operational area is long, pressure loss in signal piping is minimised by minimising signal flow demand.
- Can be used with electropneumatic regulator to give high flow E/P pressure control.
- Can be used where pressure control of lubricated air is required but signal control equipment must have non-lubricated instrument quality air.
- Can be fitted with positioners to increase actuator speed.

TECHNICAL SPECIFICATIONS

Supply Pressure	1000kPa
Signal Pressure max.	700kPa
Output Pressure max.	700kPa
Flow Rate	600 L/min at a supply pressure of 500kPa
Air Consumption	3 L/min or less at an output pressure of 100kPa
Linearity	Within ± 1%
Hysteresis	Within 1%
Effective orifice mm² (cv)	20 (1.1)
Pressure Ratio signal:output	1:1
Ambient and Fluid Temperature	-5 ~ 60ºC
Port Size	¼, ⅜

FLOW CHARACTERISTICS

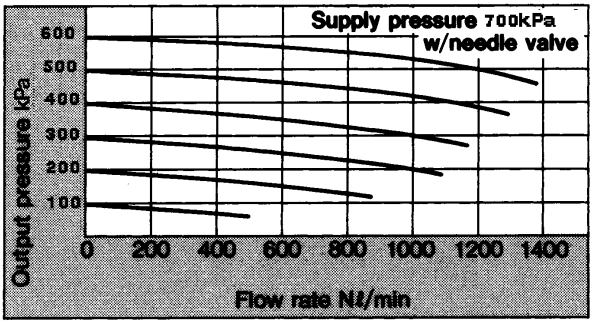

DIMENSIONS
BOOSTER RELAY IL100

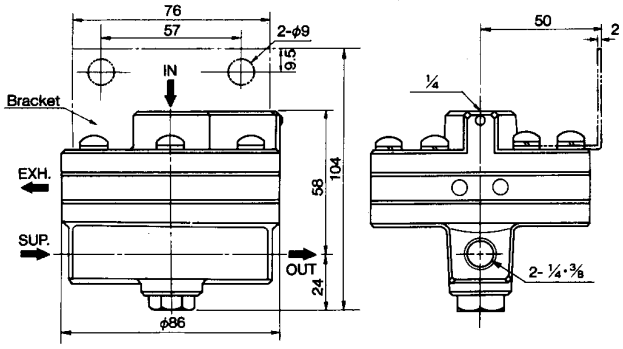

HOW TO ORDER
BOOSTER RELAY IL100

IL100-02 ¼"
IL100-03 ⅜"

ACCESSORIES
BOOSTER RELAY IL100

261022 ……Mounting Bracket

FAIRCHILD

PNEUMATIC VOLUME BOOSTER

Model 4500A

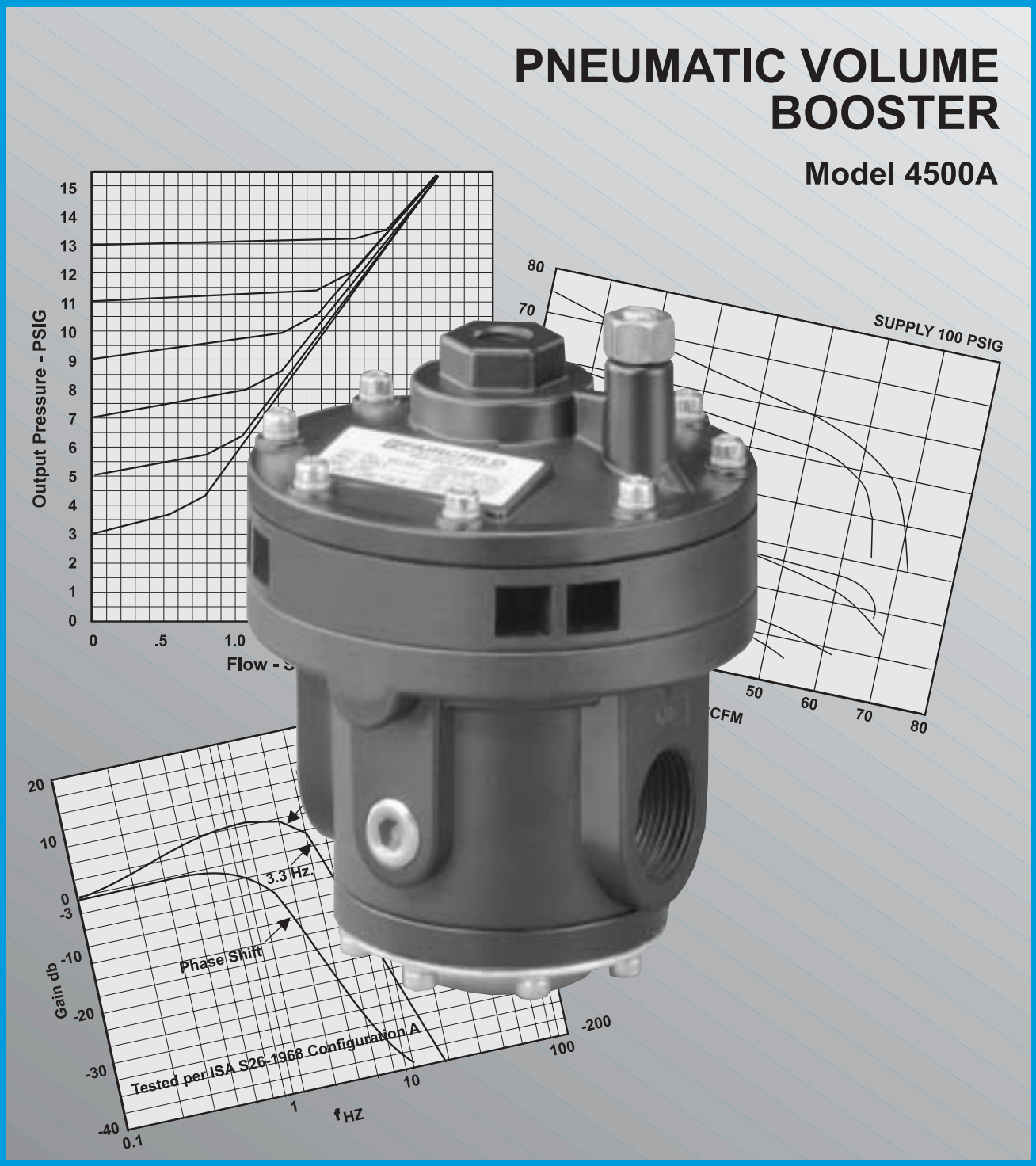

FAIRCHILD
INDUSTRIAL PRODUCTS COMPANY

CROSS SECTION

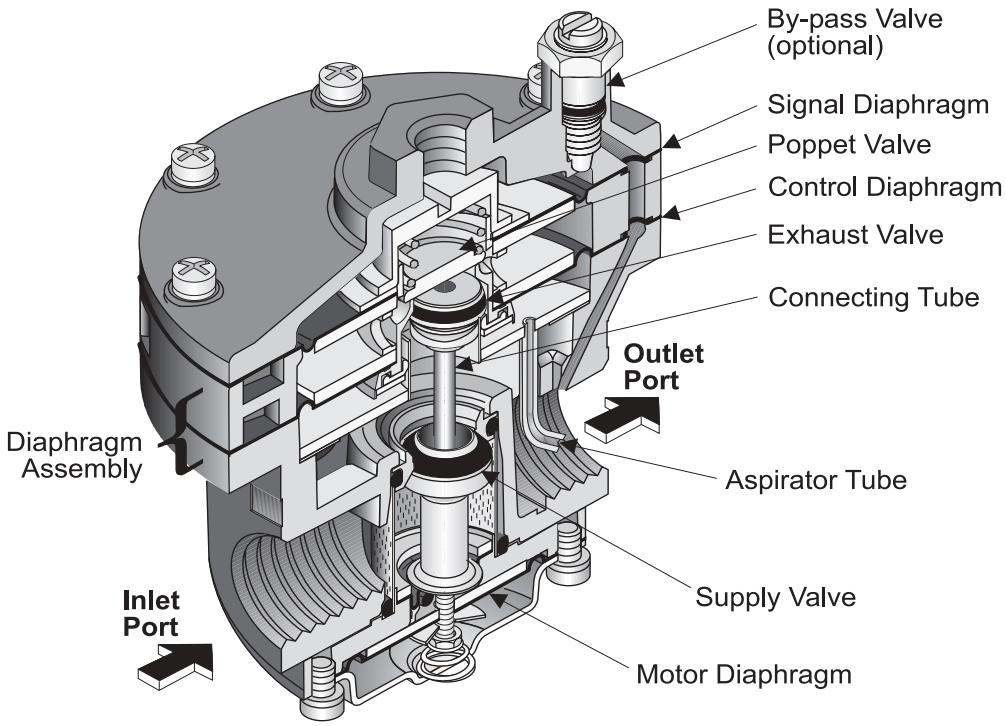

Figure 1. *Model 4500A Detail Drawing*

GENERAL INFORMATION

The Model 4500A Pneumatic Volume Booster reproduces a pneumatic signal in a 1:1 ratio or in multiplying or dividing ratios. It is ideal for systems requiring input isolation or increased flow capacity.

The Model 4500A has the following features:

- Five (5) signal to output ratios meet most control element requirements.
- Control sensitivity of 1" water column allows use in precision applications.
- Large Supply and Exhaust Valves provide high forward and exhaust flows.
- Soft Supply and Exhaust Valve seats minimize air consumption.
- A balanced Supply Valve minimizes the effect of supply pressure variation.
- An Aspirator Tube compensates downstream pressure droop under flow conditions.
- A separate Control Chamber isolates the diaphragm from the main flow to eliminate hunting and buzzing.
- Optional remote feedback port minimizes pressure drop at final control element under flow conditions.
- The optional adjustable By-pass Valve lets you tune for optimum dynamic response. (1:1 Ratio Only)
- Unit construction lets you service the Model 4500A without removing it from the line.

OPERATING PRINCIPLES

When signal pressure on the top of the Signal Diaphragm creates a downward force on the Diaphragm Assembly, the Supply Valve opens. Output pressure flows through the Outlet Port and the Aspirator Tube to the Control Chamber to create an upward force on the bottom of the Control Diaphragm. When the setpoint is reached, the force of the signal pressure that acts on the top of the Signal Diaphragm balances with the force of the output pressure that acts on the bottom of the Control Diaphragm to close the Supply Valve.

When the output pressure increases above the signal pressure, the Diaphragm Assembly moves upward to close the Supply Valve and open the Exhaust Valve. Because the Poppet Valve is closed, pressure flows down the Connecting Tube to the bottom of the Motor Diaphragm. This pressure keeps the Supply Valve tightly closed while in the exhaust mode. The Poppet Valve opens and excess output pressure exhausts through the vent in the side of the unit until it reaches the setpoint. For more information, see Figure 1.

OUTLINE DIMENSIONS

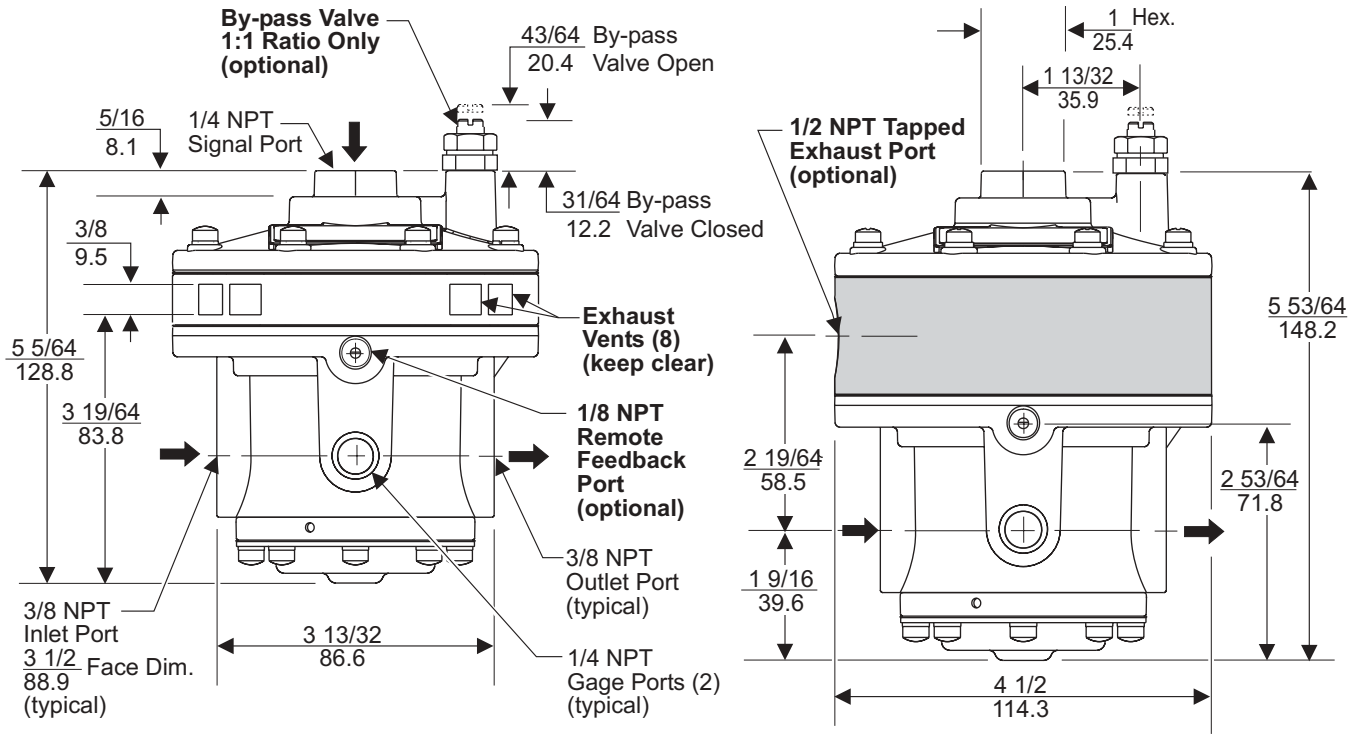

Figure 2. *Model 4500A Outline Dimensions*

SPECIFICATIONS

FUNCTIONAL SPECIFICATIONS

	Ratio	1:1	1:2	1:3	2:1	3:1
Maximum Output Pressure	psig [BAR] (kPa)	150 [10.0] (1000)	150 [10.0] (1000)	150 [10.0] (1000)	75 [5.0] (500)	50 [3.5] (350)
Maximum Supply Pressure	psig [BAR] (kPa)	250 [17.0] (1700)	250 [17.0] (1700)	250 [17.0] (1700)	250 [17.0] (1700)	250 [17.0] (1700)
Flow Capacity 100 psig, [7.0 BAR], (700kPa) supply, 20 psig, [1.5 BAR], (150 kPa) set point.	SCFM (m^3/HR)	150 (255)	150 (255)	150 (255)	150 (255)	150 (76.5)
Exhaust Capacity Downstream Pressure 5 psig, [.35 BAR], (35 kPa) above 20 psig, [1.5 BAR], (150 kPa) set point.	SCFM (m^3/HR)	40 (65.2)	40 (65.2)	40 (65.2)	40 (65.2)	40 (18.7)

PERFORMANCE SPECIFICATIONS

	Ratio	1:1	1:2	1:3	2:1	3:1
Sensitivity Water Column	(cm)	1" (2.54)	2" (5.08)	3" (7.62)	2" (5.08)	2" (5.08)
Ratio Accuracy % of 100 psig, [7.0 BAR], (700 kPa) output span.		3.0	3.0	3.0		
% of output span with 100 psig, [7.0 BAR], (700kPa) input span.					3.0	3.0
Supply Pressure Effect for change of 100 psig [7.0 BAR], (700 kPa).	psig [BAR] (kPa)	0.10 [.007] (0.7)	0.20 [.014] (1.4)	0.30 [.021] (2.1)	0.10 [.007] (0.7)	0.10 [.007] (0.7)
Ambient Temperature		-40°F to 200°F (-40°C to 93.3°C)				

Materials of Construction

Body & Housing . . . . . .Aluminum
Trim . . . . . .Zinc Plated Steel, Brass
Diaphragm . . . . . Nitrile on Dacron

TYPICAL APPLICATION

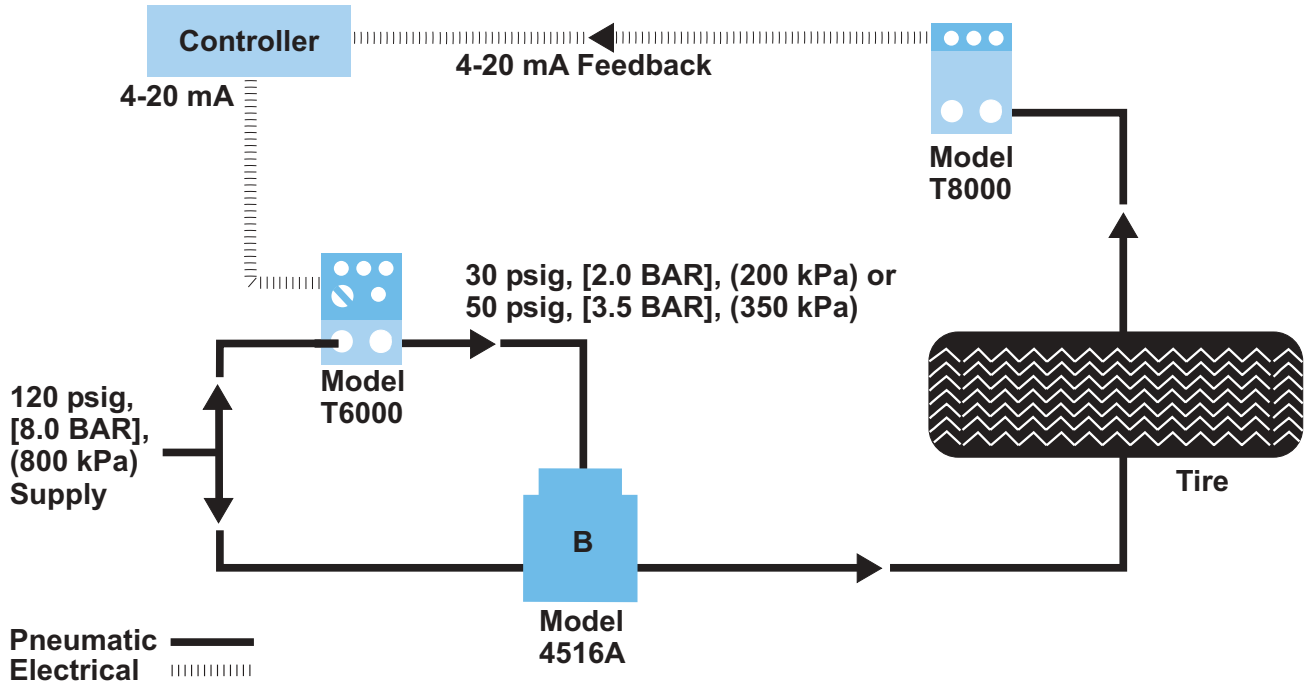

Figure 3. *Model 4500A Inflation and Test Pressure Application*

TYPICAL APPLICATION

The Model 4500A controls inflation and test pressures of a tire testing machine. An electronic controller transmits a 4-20 mA signal to a TA6000-405 transducer. The transducer sends an output signal to a Model 4516A Booster. The booster provides a set pressure to set the tire on the bead. The booster also reduces and maintains the pressure during testing. The T8000 senses the tire pressure and sends a 4-20mA signal to the Controller to close the loop. For more information, see Figure 3.

INSTALLATION

For installation instructions, see the *Model 4500A Pneumatic Volume Booster IOM,* **IS-2004500A.**

ORDERING INFORMATION

Catalog Number **45** ☐ ☐ **A** ☐

Ratio

1:1	(1)
1:2	(2)
1:3	(3)
2:1	(4)
3:1	(5)

Pipe Size

3/8 NPT	(3)
1/2 NPT	(4)
3/4 NPT	(6)

Options

Tapped Exhaust	(E)
By-pass Valve [1]	(I)
Feedback	(P)
BSPT (Tapered)	(U)
BSPP (Parallel) [2]	(H)

[1] *For 1:1 Ratio Only.*
[2] *BSPP Threads in Inlet & Outlet. Others BSPT.*

ISO 9002 Certified

FAIRCHILD
INDUSTRIAL PRODUCTS COMPANY
3920 WEST POINT BLVD. WINSTON-SALEM, NC 27103-6708
TEL 336-659-3400 FAX 336-659-9323
www.fairchildproducts.com

FM NO. 25571

CS-2004500A
Litho in USA
Rev. B 11/02

Quick Venting Valves

Nominal sizes 4 to 25
Pneumatically actuated
Port sizes G 1/8 to G 1
Operating pressure 0.5 to 10 bar

Catalog Register
P 12

Publication 750**2189**.06.06.94

Description

Quick venting valve for filtered, lubricated or non-lubricated air

Temperature range: –20 to +80°C
Material
– Body: Brass, nickel-plated
– Cover: Brass, nickel-plated
– Moulded part: PUR

Features

- High flow rate from A to R
- Low min. pressure
- Compact design
- Simple construction
- Also suitable as two-way valve or double check valve

Parameters

Symbol	Nominal size	Port size	Operating pressure [bar] min.	max.	Flow rate Q_N [1] [l/min] P to A	A to R	Dimensional drawing No.	Weight [kg]	Cat. No.
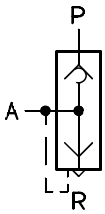	4	G 1/8	0.5	10	380	1100	01	0.10	**4050114**
	6	G 1/4	0.5	10	850	2160	01	0.18	**4050214**
	15	G 1/2	0.5	10	2160	5700	01	0.43	**4050314**
	20	G 3/4	0.5	10	1950	10600	01	0.44	**4050414**
	25	G 1	0.5	10	3400	12500	01	1.76	**4050514**

[1] at 6 bar $\Delta p = 1$

Dimensional drawing

01

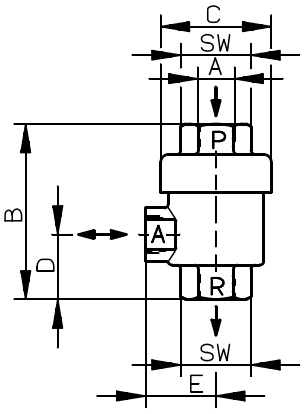

Dimensional table [mm]

Cat. No.	A	B	Dia. C	D	E	SW
4050114	G 1/8	46	29	17	18.5	16
4050214	G 1/4	65	34	25.5	24	19
4050314	G 1/2	82	44	33	30	32
4050414	G 3/4	88	49	35	38	32
4050514	G 1	109	80	39	48	46

IMI Norgren-Herion Fluidtronic GmbH & Co. KG, D-70731 Fellbach
Stuttgarter Straße 120, D-70736 Fellbach · Tel.: +49 (0)7 11 / 52 09-0 · Fax: +49 (0)7 11 / 52 09-6 14

EXCELON® 74
Filter/Regulator
3/8″, 1/2″, 3/4″ Port Sizes

- **EXCELON design allows in-line or modular installation**
- **Quick release bayonet bowl**
- **Highly visible, prismatic liquid level indicator lens**
- **Full flow gauge ports**
- **Balanced valve design minimizes effect of variation in the inlet pressure on the outlet pressure**
- **Modular installations with EXCELON 72, 73, and 74 series can be made to suit particular applications**

Technical Data

Fluid: Compressed air
Maximum pressure:
  Transparent bowl: 10 bar (150 psig)
  Metal bowl: 17 bar (250 psig)
Operating temperature*:
  Transparent bowl: -20° to 50°C (0° to 125°F)
  Metal bowl: -20° to 80°C (0° to 175°F)

* Air supply must be dry enough to avoid ice formation at temperatures below +2°C (+35°F).

Particle removal: 5, 25 or 40 µm filter element
Air quality: Within ISO 8573-1, Class 3 and Class 5 (particulates)
Typical flow with 10 bar (150 psig) inlet pressure, 6,3 (90 psig) set pressure and a droop of 1 bar (15 psig) from set:
  100 dm^3/s (212 scfm)
Manual drain connection: 1/8″
Automatic drain connection: 1/8″
Automatic drain operating conditions (float operated):
  Bowl pressure required to close drain: Greater than 0,3 bar (5 psig)
  Bowl pressure required to open drain: Less than 0,2 bar (3 psig)
  Minimum air flow required to close drain: 1 dm^3/s (2 scfm)
  Manual operation: Depress pin inside drain outlet to drain bowl
Nominal bowl size: 0,2 litre (7 fluid ounce)
Gauge ports:
  1/4 PTF with PTF main ports
  Rc1/4 with ISO Rc main ports
  Rc1/8 with ISO G main ports

Materials:
  Body: Aluminum
  Bonnet: Aluminum
  Valve: Brass
  Bowl:
    Transparent: Polycarbonate with steel bowl guard
    Metal: Aluminum
  Metal bowl liquid level indicator lens:
  Transparent nylon
  Element: Sintered plastic
  Elastomers: Neoprene and Nitrile

Ordering Information

See *Ordering Information* on the following pages.

ISO Symbols

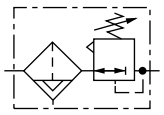

Automatic Drain, Relieving

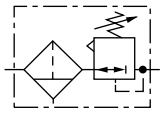

Manual Drain, Relieving

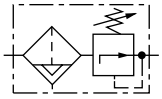

Automatic Drain, Non Relieving

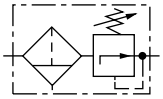

Manual Drain, Non Relieving

Typical Performance Characteristics

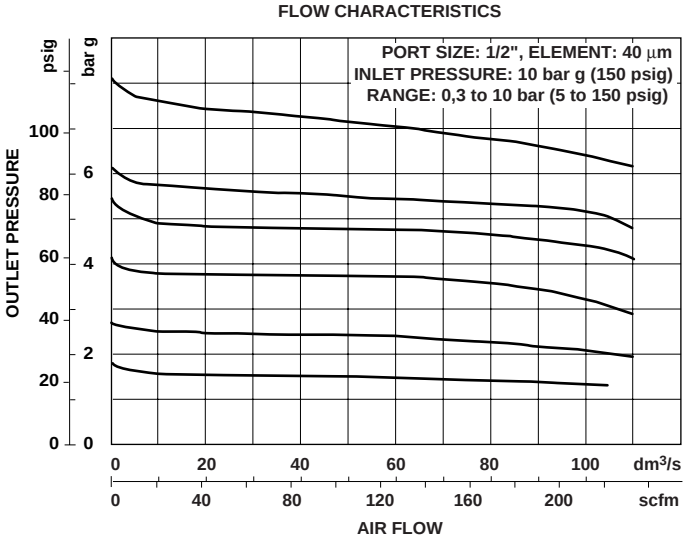

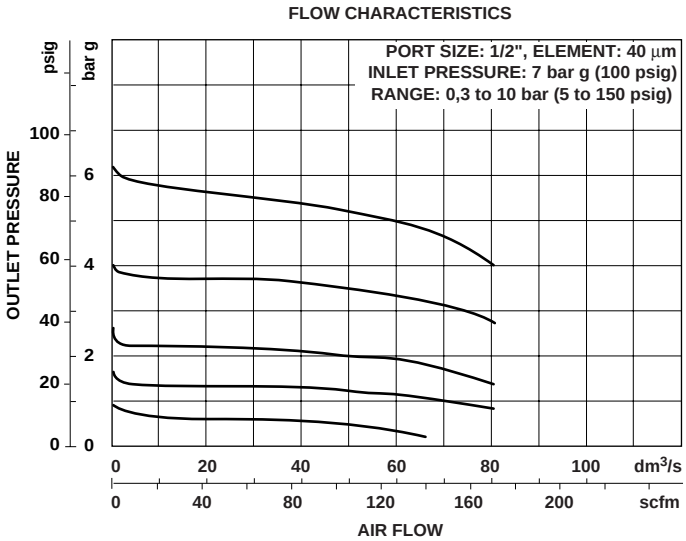

Ordering Information. Models listed include ISO G parallel threads, knob adjustment, automatic drain, metal bowl with liquid level indicator, 40 µm element, relieving diaphragm and 0,3 to 10 bar (5 to 150 psig) outlet pressure adjustment range*.

Main Port Size	Model Number	Flow† dm^3/s (scfm)	Weight kg (lb)
G3/8	B74G-3GK-AD3-RMN	77 (163)	1,19 (2.62)
G1/2	B74G-4GK-AD3-RMN	100 (212)	1,17 (2.59)
G3/4	B74G-6GK-AD3-RMN	100 (212)	1,16 (2.55)

† Typical flow with 10 bar (150 psig) inlet pressure, 6,3 bar (90 psig) set pressure and a 1 bar (15 psig) droop from set.

Alternative Models

B 7 4 G - ★ ★ ★ - ★ ★ ★ - ★ ★ ★

Port Size	Substitute
3/8″	3
1/2″	4
3/4″	6

Threads	Substitute
PTF	A
ISO Rc taper	B
ISO G parallel	G

Adjustment	Substitute
Knob	K
T-bar	T

Drain	Substitute
Automatic	A
Manual, 1/4 turn	Q

Gauge	Substitute
With	G
Without	N

Outlet Pressure Adjustment Range*	Substitute
0,3 to 4 bar (5 to 60 psig)	F
0,3 to 10 bar (5 to 150 psig)	M
0,7 to 17 bar (10 to 250 psig)**	S

Diaphragm	Substitute
Relieving	R
Non relieving	N

Element	Substitute
5 µm	1
25 µm	2
40 µm	3

Bowl	Substitute
Metal with liquid level indicator	D
Transparent with guard	P

* Outlet pressure can be adjusted to pressures in excess of, and less than, those specified. Do not use these units to control pressures outside of the specified ranges.

** Units with 17 bar (250 psig) outlet pressure range are available only with the T-bar adjustment; therefore substitute ***T*** at the 7th digit and ***S*** at the 12th position.

Accessories

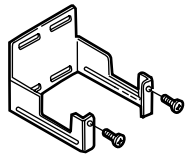	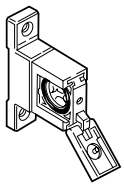		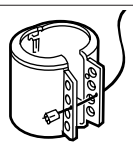
Wall Mounting Bracket	Quikclamp and Quikclamp Wall Bracket	Panel Nut	Tamper Resistant Cover & Seal Wire ††
4324-50	4314-52	4348-89	4355-51
			Seal Wire: 2117-01

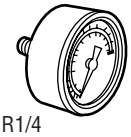

∅ 50 mm Pressure Gauge	R1/4 Connection	R1/8 Connection	1/4 PTF Connection
4 bar (60 psig)	18-013-266	18-013-011	18-013-208
10 bar (150 psig)	18-013-260	18-013-013	18-013-209
20 bar (300 psig)	18-013-267	18-013-014	18-013-210

†† Use padlock with shackle up to 8 mm (0.3") in diameter.

Dimensions mm (inches)

Panel mounting hole diameter: 52 mm (2.06″)
Panel thickness: 2 to 6 mm (0.06″ to 0.25″)

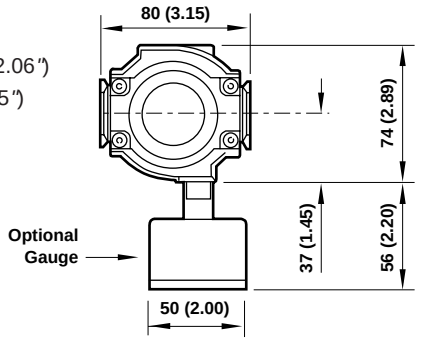

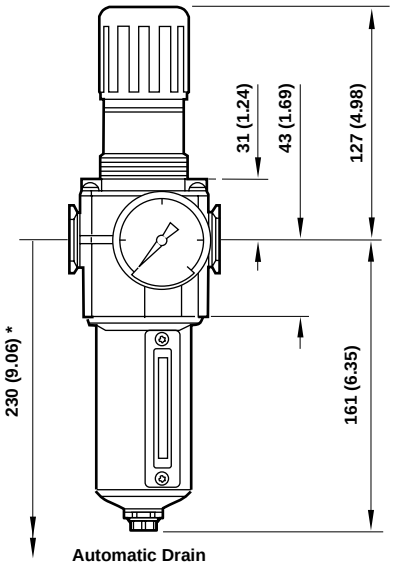

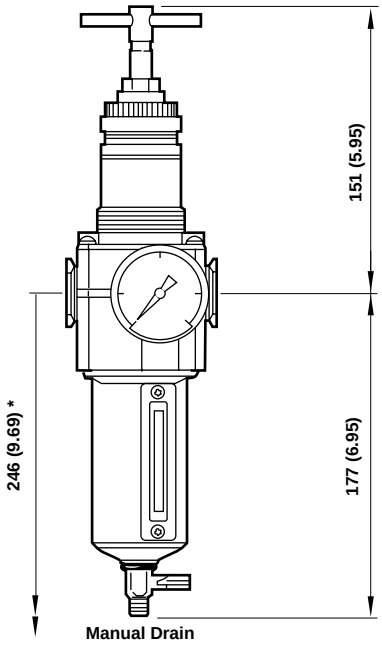

* Minimum clearance to remove bowl.

Bracket Mounting

Mounting Bracket

Use 5 mm (3/16″) screws to mount bracket to wall.

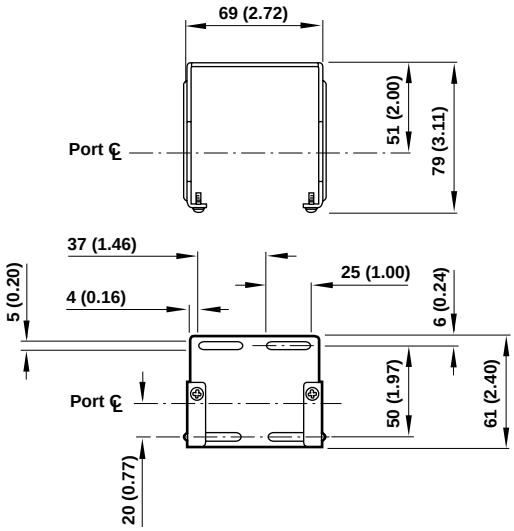

Quikclamp and Quikclamp Wall Bracket

Use 6 mm (7/32″) screws to mount bracket to wall

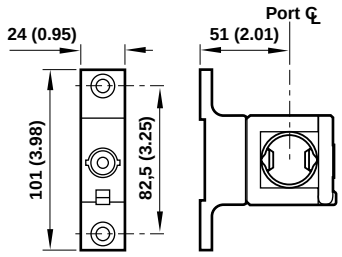

Bracket Kit Reference

Item	Part Number
Wall Bracket	4324-50
Quikclamp and Quikclamp Wall Bracket	4314-52

Service Kits

Item	Type	Part Number
Service kit	Relieving	4383-700
	Non relieving	4383-701
Replacement elements	5 µm	4338-04
	25 µm	4338-07
	40 µm	4338-05
Liquid level lens kit	Prismatic	4380-050
Replacement drains	Automatic (1/8 NPT outlet)	3000-10
	Automatic (G 1/8 outlet)	3000-97
	Manual quarter turn	619-50

Service kit includes diaphragm assembly, valve assembly, valve spring, louvre o-ring, bowl o-ring, drain seal.

Warning

These products are intended for use in industrial compressed air systems only. Do not use these products where *pressures* and *temperatures* can exceed those listed under **'Technical Data'**.

Before using these products with fluids other than those specified, for non-industrial applications, life-support systems, or other applications not within published specifications, consult Norgren.

Through misuse, age, or malfunction, components used in fluid power systems can fail in various modes. The system designer is warned to consider the failure modes of all component parts used in fluid power systems and to provide adequate safeguards to prevent personal injury or damage to equipment in the event of such failure.

System designers must provide a warning to end users in the system instructional manual if protection against a failure mode cannot be adequately provided.

System designers and end users are cautioned to review specific warnings found in instruction sheets packed and shipped with these products.

Water vapor will pass through these units and will condense into liquid if air temperature drops in the downstream system. Install an air dryer if water condensation could have a detrimental effect on the application.

18-013, 5PG

Air Pressure Gauges
1/8" and 1/4" Port Sizes

- **Monitor pressures in compressed air systems for optimum efficiency**
- **Triple calibrated scale indicates pressure in psi, bar, and Mpa (megapascal)**
- **Back or bottom connection**
- **Panel mount, stainless steel, and Underwriters Laboratories, Inc. listed gauges available**

Technical Data

Fluid: Compressed air and inert gasses
Maximum pressure: 100% of full scale on gauge
Operating temperature: -30° to 175°F (-34° to 80°C)*
* Air supply must be dry enough to avoid ice formation at temperatures below 35°F (2°C).
Accuracy:
- 2% of full scale at midrange
- 3% of full scale at other ranges

Materials
- Body
  - Standard: Gauges may have a steel or plastic body
  - Optional: Stainless steel
- Crystal:
  - Standard steel and plastic bodies have plastic crystal
  - Optional stainless steel body has glass crystal
- Connector:
  - Standard steel and plastic bodies have brass connector
  - Optional stainless steel body has stainless steel connector

ISO Symbol

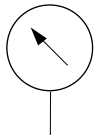

Ordering Information, Black Face Gauges - psi outer scale, bar middle scale, Mpa inner scale

Center Back Connection

Scale Range Outer Scale psig	Middle Scale bar	Inner Scale Mpa	1/8 NPT 1.5" (40mm) Diameter	1/8 NPT 2" (50mm) Diameter	1/4 NPT 2" (50mm) Diameter	R1/4 2" (50mm) Diameter
0 to 30	0 to 2	0 to 0.2	18-013-214	18-013-201	18-013-207	—
0 to 60	0 to 4	0 to 0.4	18-013-211	18-013-202	18-013-208	18-013-268
0 to 100	0 to 7	0 to 0.7	—	18-013-203	18-013-235	—
0 to 160	0 to 11	0 to 1.1	18-013-212	18-013-204	18-013-209	18-013-269
0 to 300	0 to 20	0 to 2.1	—	18-013-205	18-013-210	18-013-270
0 to 400	0 to 28	0 to 2.8	—	18-013-206	—	—

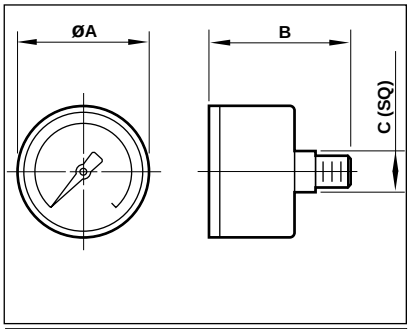

A	B	C
1.5 (40)	1.60 (41)	0.47 (12)
2.0 (50)	1.85 (47)	0.55 (14)

Bottom Connection - 2" (50 mm) diameter gauges do not have the Mpa scale

Scale Range Outer Scale psig	Middle Scale bar	Inner Scale Mpa	1/8 NPT 1.5" (40mm) Diameter	1/4 NPT 2" (50mm) Diameter
0 to 15	0 to 1	—	—	18-013-082
0 to 30	0 to 2	0 to 0.2	18-013-224	18-013-030 *
0 to 60	0 to 4	0 to 0.4	18-013-225	18-013-083 *
0 to 100	0 to 7	0 to 0.7	18-013-265	18-013-084 *
0 to 160	0 to 11	0 to 1.1	18-013-273	18-013-085 *
0 to 300	0 to 20	—	—	18-013-086 *
0 to 2000	0 to 135	—	—	18-013-244 *†
0 to 3000	0 to 205	—	—	18-013-087 *†

* Underwriters Laboratories Inc. Listed
† Shipped with pulsation dampener installed.

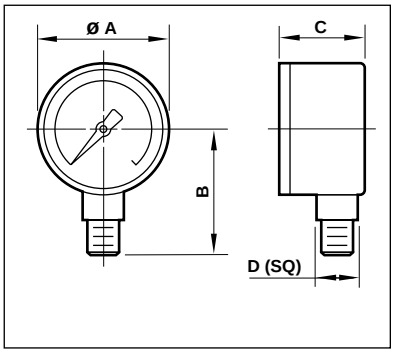

A	B	C	D
1.5 (40)	1.42 (36)	0.90 (23)	0.47 (12)
2.0 (50)	1.73 (44)	1.03 (26)	0.55 (14)

Center Back Connection, Panel Mounted

Scale Range Outer Scale psig	Middle Scale bar	Inner Scale Mpa	1/4 NPT Male and 10-32 Female 1.5" (40mm) Diameter
0 to 30	0 to 2	0 to 0.2	5PG-306-000 **
0 to 60	0 to 4	0 to 0.4	5PG-312-000 **
0 to 100	0 to 7	0 to 0.7	5PG-320-000 **

** Requires 1.63" (41 mm) diameter panel hole.

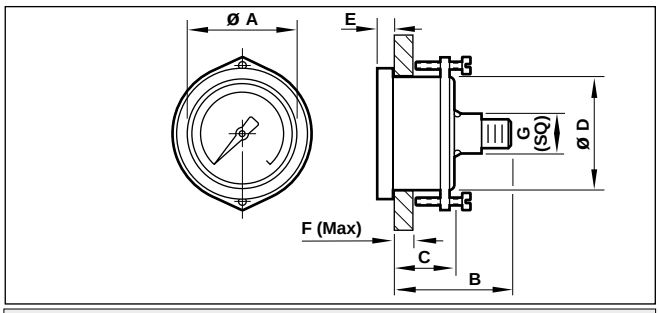

A	B	C	D	E	F (Max)	G
1.5 (40)	1.51 (38)	0.86 (22)	1.61 (41)	0.18 (5)	0.5 (13)	0.55 (14)

Alternative Models

Pulsation Dampener: Add ***-9D*** to the end of the model number.

Air Pressure Gauges

All Dimensions in Inches (mm)

Ordering Information, White Face Gauges - bar outer scale, Mpa middle scale, psi inner scale

Center Back Connection

Scale Range					
Outer Scale bar	Middle Scale Mpa	Inner Scale psi	R1/8 1.5" (40mm) Diameter	R1/8 2" (50mm) Diameter	R1/8 2.5" (63mm) Diameter
0 to 1.6	0 to 0.16	0 to 23	18-013-991	18-013-010	—
0 to 4	0 to 0.4	0 to 56	18-013-990	18-013-011	—
0 to 6	0 to 0.6	0 to 84	—	18-013-012	—
0 to 10	0 to 1.0	0 to 140	18-013-989	18-013-013	18-013-856
0 to 16	0 to 1.6	0 to 240	—	—	18-013-855
0 to 25	0 to 2.5	0 to 360	18-013-908	18-013-014	—

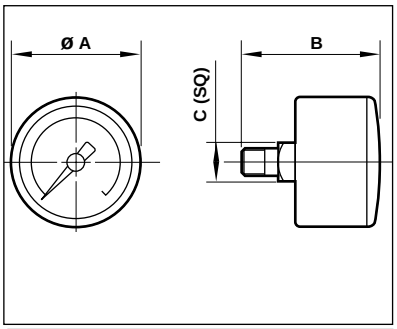

A	B	C
1.5 (40)	1.77 (45)*	0.55 (14)
2.0 (50)	1.93 (49)	0.55 (14)
2.5 (63)	1.89 (48)	0.55 (14)

* 1.57 (40) on 1/8 PTF stainless steel gauges
1.85 (47) on 1/4 PTF stainless steel gauges

Stainless Steel Gauges - gauges do not have the Mpa scale

Scale Range			
Outer Scale bar	Inner Scale psi	1/8 PTF 1.5" (40mm) Diameter	1/4 PTF 1.5" (40mm) Diameter
0 to 6	0 to 84	—	18-013-913
0 to 10	0 to 140	18-013-844	18-013-909
0 to 25	0 to 360	—	18-013-905

Bottom Connection

Scale Range				
Outer Scale bar	Middle Scale Mpa	Inner Scale psi	R1/8 2" (50mm) Diameter	G1/4A 2.5" (63mm) Diameter
0 to 1.6	0 to 0.16	0 to 23	18-013-024	—
0 to 4	0 to 0.4	0 to 56	18-013-025	—
0 to 6	0 to 0.6	0 to 84	18-013-026	—
0 to 10	0 to 1.0	0 to 140	18-013-027	18-013-854
0 to 16	0 to 1.6	0 to 240	—	18-013-853
0 to 25	0 to 2.5	0 to 360	18-013-028	—

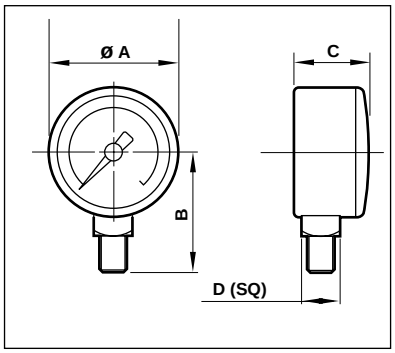

A	B	C	D
2.0 (50)	1.77 (45)	1.10 (28)	0.55 (14)
2.5 (63)	2.09 (53)	1.10 (28)	0.55 (14)

Center Back Connection, Panel Mount

Scale Range				
Outer Scale bar	Middle Scale Mpa	Inner Scale psi	G1/8A 2" (50mm) Diameter	G1/8A 2.5" (63mm) Diameter
0 to 6	0 to 0.6	0 to 84	18-013-858 *	—
0 to 10	0 to 1.0	0 to 140	18-013-857 *	18-013-852 †
0 to 16	0 to 1.6	0 to 240	—	18-013-851 †

* Requires 2.01" (51 mm) diameter panel hole.
† Requires 2.52" (64 mm) diameter panel hole.

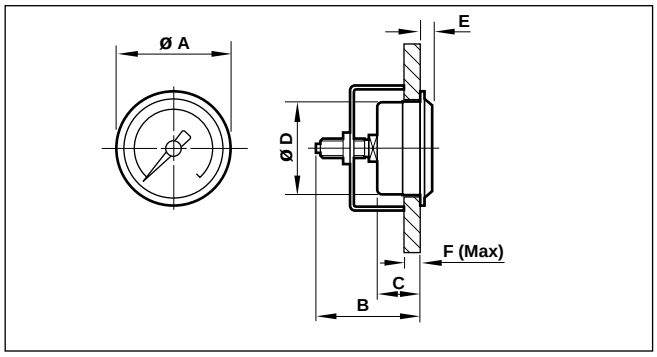

A	B	C	D	E	F
2.0 (50)	2.17 (55)	1.02 (26)	1.93 (49)	0.20 (5)	0.37 (9.5)
2.5 (63)	2.20 (56)	1.06 (27)	2.44 (62)	0.24 (6)	0.37 (9.5)

Limit Switch Type 3776

with inductive or electric contacts and solenoid valve for linear actuators or rotary actuators according to VDI/VDE 3845

General

The Type 3776 Limit Switch issues an electrical signal when an adjusted limit value is exceeded or not reached. The signal is suitable for reversing control signals, generating visual and audible alarms or for connection to central control and alarm systems. The limit switch can be equipped with a solenoid valve for controlling the monitored actuator.

Versions

The Type 3776 Limit Switch offers a variety of different contacts, switching functions, connections, and mounting kits for all desired applications:

General

- Electrical connection via cable gland M 20 × 1.5 to terminals or via a plug-type connector
- Internal AS-Interface with bus connection (optionally)
- Corrosion-resistant, sturdy enclosure with degree of protection IP 54 or IP 65 for applications in aggressive environments
- Maximum permissible ambient temperature −45 to +80 °C, depending on the components and the type of protection
- Mounting kits for linear actuators or rotary actuators with interface according to VDI/VDE 3845

Contacts

- Maximum 3 easy and accurately adjustable contacts
- Inductive pick-ups, inductive double proximity switch or electric microswitches

Solenoid valve

- 1 or 2 integral pilot valves for single or double actuation of a booster valve
- E/P binary converter with flapper/nozzle assembly proven already a million times in practice
- Type of protection II 2 G EEx ia IIC T6 or II 3 G EEx nA II T6 (optionally)
- Nominal signals 6/12/24 V DC or 24/115/230 V AC
- Power consumption 6 to 27 mW or 0.04 to 0.46 VA, depending on the nominal signal
- Manual override (optionally)
- Air supply 2.2 to 6.0 bar

- Flanged Type 3777 Booster Valve with diaphragm or piston
- 3/2, 5/2 or 5/3-way function
- K_{vs} value 0.2 to 0.3
- Restrictors for adjusting different closing and opening times (optionally)
- Threaded connection G (NPT) $^1/_4$

- Flanged Type 3777 Connection Block for actuation of an external Type 3756 Booster Valve G (NPT) $^1/_4$
- Threaded connection G (NPT) $^1/_4$

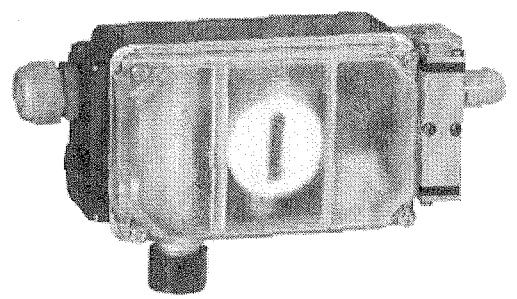

Fig. 1 · Type 3776 Limit Switch

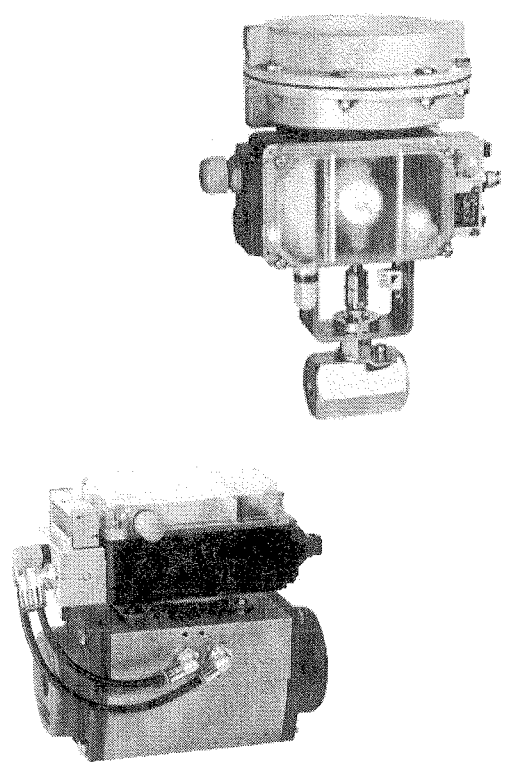

Fig. 2 · Type 3776 Limit Switch for linear actuators or rotary actuators according to VDI/VDE 3845

Examples of application

SAMSON Type 3278 Rotary Actuator

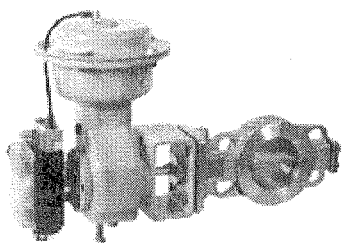

Fig. 3

Type 3776-0323203221 Limit Switch
- Without explosion protection
- 2 Type SB 3,5-E2 Inductive Pick-ups
- 1 pilot valve 24 V DC
- Manual override
- Plug-type connection
- Degree of protection IP 65

Type 3777-3030 Booster Valve
- Connection G $^1/_4$
- 3/2-way function
- Spring-returned
- K_{vs} value 0.20
- Without restrictors

Mounting kit (Order No. 1400-XXXX)

Rotary actuators according to VDI/VDE 3845 – fixing level 1

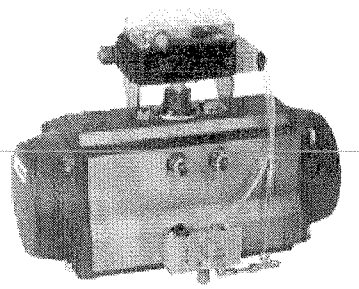

Fig. 4

Type 3776-1223201211 Limit Switch
- Type of protection II 2 G EEx ia IIC T6
- 2 Type SJ 3,5-SN Inductive Pick-ups
- 2 pilot valves 24 V DC
- Manual override
- Terminal connection
- Degree of protection IP 54

Type 3777-3020 Connection Block
- Connection G $^1/_4$
- Double
- Without restrictors

External Type 3756-3025 Booster Valve
- Connection G $^1/_4$
- 5/2-way function
- Detented (2 positions)
- K_{vs} value 1,4

Mounting kit (Order No. 1400-XXXX)

Rotary actuators according to VDI/VDE 3845 – fixing level 2

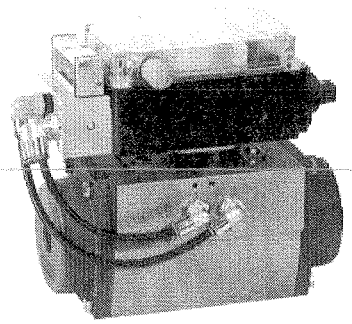

Fig. 5

Type 3776-0123105011 Limit Switch
- Without explosion protection
- 2 Type SC 3,5-N0 Inductive Pick-ups
- 1 pilot valve 24 V DC
- Without manual override
- Bus connection with internal AS-Interface
- Degree of protection IP 54

Type 3777-3650 Booster Valve
- Connection G $^1/_4$
- 5/2-way function
- Spring-returned
- K_{vs} value 0.30
- Without restrictors

Mounting kit (Order No. 1400-XXXX)

SAMSON Type 3241 Linear Actuator with rib according to DIN EN 60534-6-1

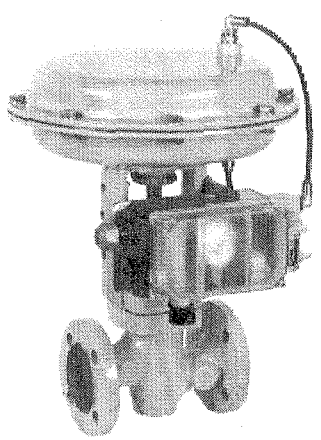

Fig. 6

Type 3776-1223201221 Limit Switch
- Type of protection II 2 G EEx ia IIC T6
- 2 Type SJ 3,5-SN Inductive Pick-ups
- 1 pilot valve 24 V DC
- Manual override
- Terminal connection
- Degree of protection IP 65

Type 3777-3030 Booster Valve
- Connection G $^1/_4$
- 3/2-way function
- Spring-returned
- K_{vs} value 0.20
- Without restrictors

Mounting kit (Order No. 1400-XXXX)

SAMSON Type 3277 Linear Actuator

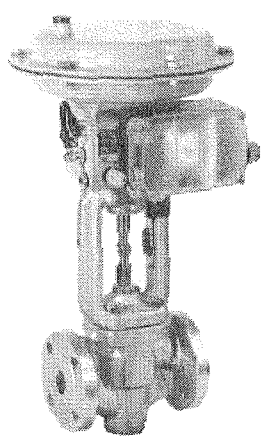

Fig. 7

Type 3776-022311221 Limit Switch
- Without explosion protection
- 2 Type SJ 3,5-SN Inductive Pick-ups
- 1 pilot valve 24 V DC
- Manual override
- Terminal connection
- Degree of protection IP 65

Type 3777-3030 Booster Valve
- Connection G $^1/_4$
- 3/2-way function
- Spring-returned
- K_{vs} value 0.20
- Without restrictors

Mounting kit (Order No. 1400-XXXX)

SAMSON Type 3277-5 with internal routing of the signal pressure

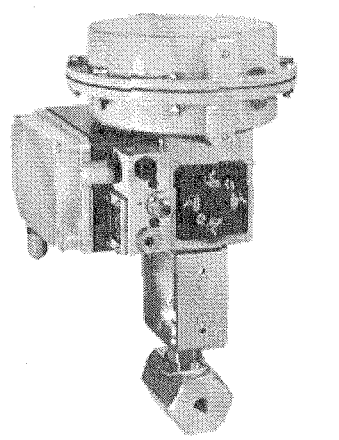

Fig. 8

Type 3776-1223201211 Limit Switch
- Type of protection II 2 G EEx ia IIC T6
- 2 Type SJ 3,5-SN Inductive Pick-ups
- 1 pilot valve 24 V DC
- Manual override
- Terminal connection
- Degree of protection IP 54

Type 3777-3030 Booster Valve
- Connection G $^1/_4$
- 3/2-way function
- Spring-returned
- K_{vs} value 0.20
- Without restrictors

Mounting kit (Order No. 1400-XXXX)

Function

Contacts

The limit switch is equipped with a maximum of three inductive pick-ups, one inductive double proximity switch or three electric microswitches.

For most applications, the contacts are adjusted to provide a signal when the actuator has reached one of its end positions. The switching point can also be adjusted to any position within the rotary range or travel range to signalize an intermediate position (see Mounting and Operating Instructions EB 3776 EN).

The shaft of the limit switch is placed onto the stub of the rotary actuator or connected to the linear actuator via a coupling lever. The shaft is equipped with a maximum of three metal tags or cam disks and an indicating cap to indicate the valve position on the rotary actuator. On linear actuators, there is no indicating cap because the valve position is indicated by the actuator stem.

The shaft ① of the **limit switch with inductive pick-ups** (Fig. 9) is equipped with a maximum of three adjustable metal tags ②. When the metal tag ② enters the electromagnetic field of the pick-up ③, the initiator becomes attenuated and the output high-resistant (switching function "contact open"). When the metal tag ② leaves the electromagnetic field, the pick-up ③ is unattenuated and the output low-resistant (switching function "contact closed"). The metal tags ② can be adjusted to a switching point between 0° and 100° using the adjusting screws ④.

The **limit switch with inductive double proximity switch** (Fig. 10) is a low-cost version which can be used only on rotary actuators.

The shaft ① of the limit switch is equipped with an adjustable metal tag ②. When the metal tag ② enters the electromagnetic field of the proximity switch ③, the initiator becomes attenuated and the output high-resistant (switching function "contact open"). When the metal tag ② leaves the electromagnetic field of the proximity switch, the initiator ③ is unattenuated and the output low-resistant (switching function "contact closed"). The metal tag ② can be adjusted to a switching point of 70° or 90° by means of the adjusting screw ④.

The shaft ① of the **limit switch with electric microswitches** (Fig. 11) is equipped with a maximum of three adjustable cam disks ②. The cam disk ② actuates an electric microswitch ③ by means of the roller mounted to the switch lever ⑤. The cam disks ② can be adjusted to a switching point between 0° and 100° using the adjusting screws ④.

Inductive pick-ups

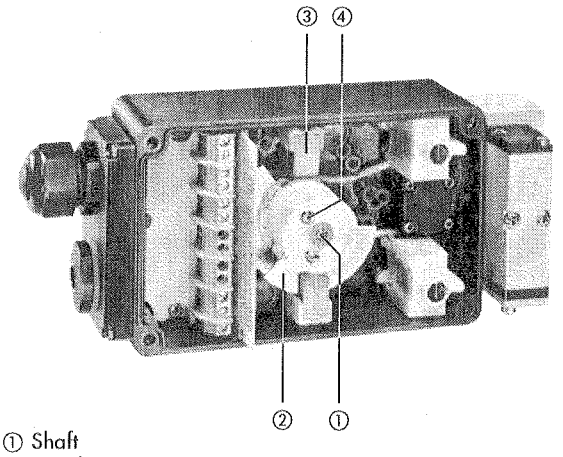

① Shaft
② Metal tag
③ Inductive pick-up
④ Adjusting screw

Fig. 9

Inductive double proximity switch

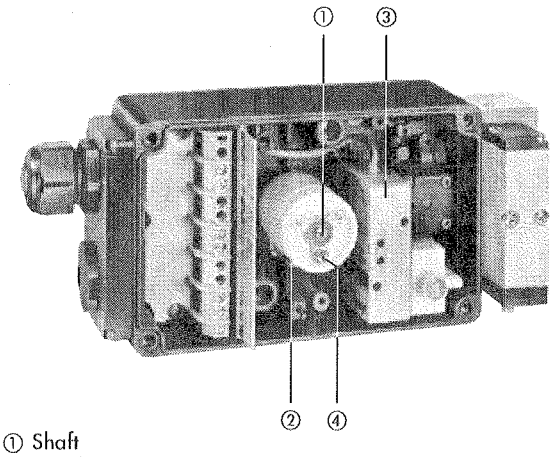

① Shaft
② Metal tag
③ Inductive double proximity switch
④ Adjusting screw

Fig. 10

Electric microswitches

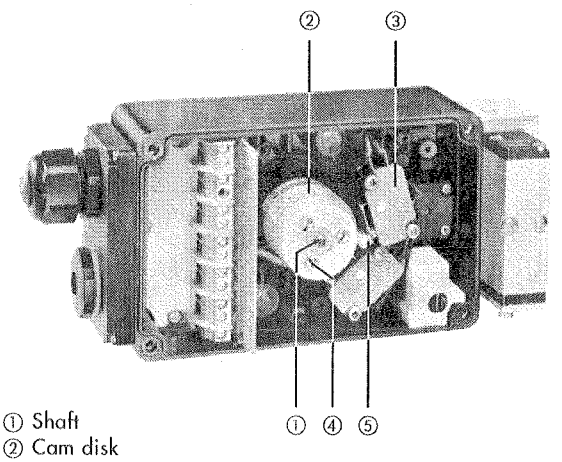

① Shaft
② Cam disk
③ Electric microswitch
④ Adjusting screw
⑤ Switch lever

Fig. 11

Function (continued from page 3)

Solenoid valve

The limit switch can be equipped with an optional solenoid valve for controlling the monitored actuator. The binary signals issued by an electric control unit are converted into binary pressure signals, which open or close the actuator (Figs. 12 and 13).

The solenoid valve consists of one or two pilot valves and a single-actuated or double-actuated booster valve. The pilot valves are integrated and the Type 3777 Booster Valve is flanged to the enclosure. Alternatively, an external Type 3756 Booster Valve G (NPT) $^1/_4$ can be attached to the actuator, which is pneumatically actuated via a Type 3777 Connection Block flanged to the enclosure (see "Examples of application", page 2, Fig. 4).

The **limit switch with one pilot valve** consists of an E/P binary converter Ⓐ with manual override Ⓑ and a single-actuated 3/2 or 5/2-way booster valve © with return spring. The air is fed to the E/P binary converter Ⓐ from connection 9 via the pressure reducer ⑤ and the restrictor ⑥.

In the normal position, the flapper ② is lifted off the outlet nozzle ① by the spring ③. As a result, a pressure lower than the switch-off pressure of the booster valve © builds up in the pressure devider that consists of a restrictor ⑥ and an outlet nozzle ①. When the solenoid ④ is energized by an electrical binary signal, the outlet nozzle ① is closed by the flapper ② against the force of the spring ③. As a result, the pressure in the pressure devider rises above the switch-on pressure of the booster valve ©, thus switching it to the operating position. When the electrical binary signal is deactivated and thus the solenoid de-energized, the booster valve © will be switched to the normal position by a return spring.

The **limit switch with two pilot valves** consists of two E/P binary converters Ⓐ with manual override Ⓑ and a double-actuated detented 5/2-way booster valve © or spring-centered 5/3-way booster valve ©. The air is fed to the E/P binary converters Ⓐ from the connections 9 via the pressure reducers ⑤ and the restrictors ⑥.

In the normal position, the flapper ② is lifted off the outlet nozzle ① by the spring ③. As a result, a pressure lower than the switch-off pressure of the booster valve © builds up in the pressure devider that consists of a restrictor ⑥ and an outlet nozzle ①. When the solenoid ④ is energized by an electrical binary signal, the outlet nozzle ① is closed by the flapper ② against the force of the spring ③. As a result, the pressure in the pressure devider rises above the switch-on pressure of the booster valve ©, thus switching it to the operating position. When the electrical binary signal is deactivated and thus the solenoid de-energized, the operating position of the detented booster valve © will be retained until a reverse signal is received. The spring-centered booster valve © will be switched to the mid-position by return springs.

Solenoid valve

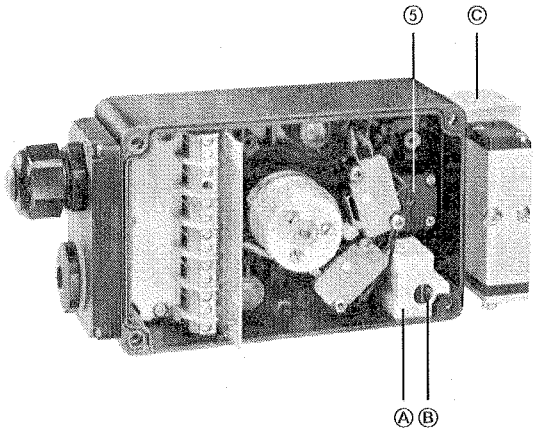

Ⓐ E/P binary converter
⑤ Pressure reducer
Ⓑ Manual override (optionally)
© Type 3777 Booster Valve

Fig. 12

Functional diagram of the solenoid valve

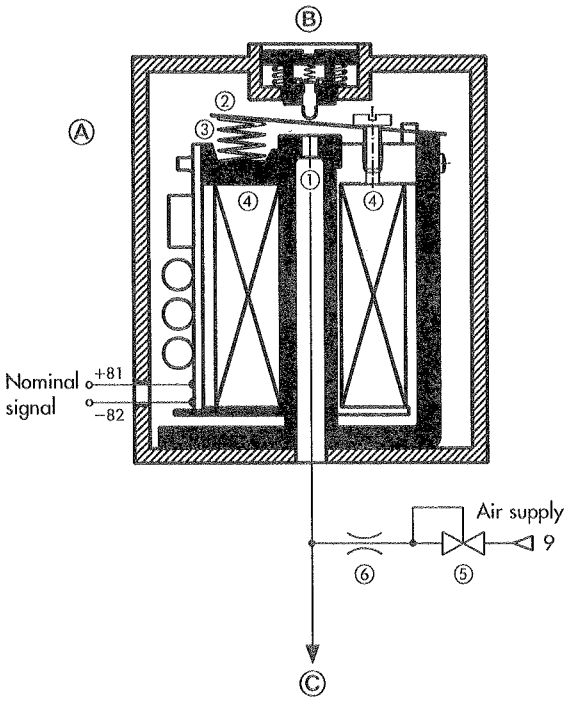

Ⓐ E/P binary converter
① Outlet nozzle
② Flapper
③ Spring
④ Solenoid
⑤ Pressure reducer
⑥ Restrictor
Ⓑ Manual override (optionally)
© Type 3777 Booster Valve

Fig. 13

Technical data

Type 3776 Limit Switch		
General data		
Rotating range	0° ... 100°, 0° ... 180° on request	
Travel range	7.5 ... 120 mm for attachment to linear actuators (e.g. SAMSON Type 327X)	
Material		
Enclosure	Polyamide PA6-3-T, black	
Enclosure cover	Polycarbonate 2807, transparent	
Driver shaft	Polyoxymethylene	
Filter	Filter, made of polyethylene, Filter check valve, made of polyamide or stainless steel 1.4305	
Screws	Stainless steel 1.4301	
Degree of protection	IP 54 with filter, IP 65 with filter check valve	
Mounting position	Special mounting position (see Mounting and Operating Instructions EB 3776 EN)	
Ambient temperature, depending on the components and the type of protection	**Without explosion protection**	Permissible components
	−20 ... +80 °C	All components Type SB 3,5-E2 Inductive Pick-up (max. +70 °C)
	−40 ... +80 °C	Type SC 3,5-N0 Inductive Pick-up Type SJ 3,5-SN Inductive Pick-up Electric microswitch Pilot valve AC/DC Cable gland, made of brass Male connector (manufactured by Harting), made of aluminum Filter check valve, made of stainless steel 1.4305
	−45 ... +80 °C	Type SJ 3,5-SN Inductive Pick-up Pilot valve AC/DC Cable gland, made of brass Male connector (manufactured by Harting), made of aluminum Filter check valve, made of stainless steel 1.4305
	Type of protection EEx ia IIC [1]	Permissible components
	−20 ... +60 °C (temperature class T6) −20 ... +70 °C (temperature class T5) −20 ... +80 °C (temperature class T4)	Type SC 3,5-N0 Inductive Pick-up Type SJ 3,5 SN Inductive Pick-up Type NCN3-F24R-N4 Inductive Double Proximity Switch Electric microswitch Pilot valve DC All electrical connection options All filter options
	−45 ... +60 °C (temperature class T6) −45 ... +70 °C (temperature class T5) −45 ... +80 °C (temperature class T4)	Type SC 3,5-N0 Inductive Pick-up Type SJ 3,5 SN Inductive Pick-up Type NCN3-F24R-N4 Inductive Double Proximity Switch Pilot valve DC Cable gland, made of brass Male connector (manufactured by Harting), made of aluminum Filter check valve, made of stainless steel 1.4305
	Type of protection EEx nA II [2]	Permissible components
	−45 ... +60 °C (temperature class T6) −45 ... +70 °C (temperature class T5) −45 ... +80 °C (temperature class T4)	Type SC 3,5-N0 Inductive Pick-up Type SJ 3,5 SN Inductive Pick-up Type NCN3-F24R-N4 Inductive Double Proximity Switch Electric microswitch Pilot valve DC Cable gland, made of brass Male connector (manufactured by Harting), made of aluminum Filter check valve, made of stainless steel 1.4305
Electrical connection	Terminal connection, plug-type connection or internal AS-Interface with bus connection (see "Versions and ordering data", page 13)	
Weight approx.	450 g (without Type 3777 Connection Block/Booster Valve)	

[1]) II 2 G EEx ia IIC T6 according to EC Type Examination Certificate PTB 98 ATEX 2072
[2]) II 3 G EEx nA II T6 according to Statement of Conformity PTB 02 ATEX 2007 X

Technical data (continued from page 5)

Contact						
Type 3776	**-X1**	**-X2**	**-03**	**-07**	**-X5**	**-X6**
Version	Inductive pick-up			Inductive double proximity switch	Electric microswitch	
	SC 3,5-N0 with LED, yellow	SJ 3,5-SN	SB 3,5-E2 with LED, yellow	NCN3-F24R-N4 with LED, yellow	Silver contact	Gold contact
Switching function	Break contact	Break contact	Make contact (PNP)	2 break contacts	Switch-over contact	
Switching hysteresis	0.03 ... 0.2 mm	≤ 0.03 mm	0.4 ... 0.6 mm	0.3 ... 1.2 mm	Approx. 0.3 mm	
Angle of rotation	≤ 4.0°	≤ 1.1°	≤ 1.7°	≤ 4.0°	≤ 2.0°	
Travel	≤ 1.8 mm	≤ 0.5 mm	≤ 0.75 mm	≤ 1.8 mm	≤ 0.9 mm	
Switching point drift Angle of rotation$_{\Delta 50\ K}$	≤ 2.5°	≤ 0.5°	≤ 1.0°	≤ 2.5°	≤ 0.5°	
Travel$_{\Delta 50\ K}$	≤ 1.0 mm	≤ 0.2 mm	≤ 0.4 mm	≤ 1.0 mm	≤ 0.2 mm	
Nominal voltage U_0 Operating voltage U_B Loading capacity max.	8 V DC	8 V DC	10 ... 30 V DC	8 V DC	42 V AC/5.5 A, 42 V DC/0.25 A, 20 V DC/5.5 A	
Current consumption Metal tag undetected	3 mA (LED on)	3 mA	3 mA (LED off)	3 mA (LED on)		
Metal tag detected	1 mA (LED off)	1 mA	1 mA (LED on)	1 mA (LED off)		
Ambient temperature	−40 ... +80 °C	−45 ... +80 °C	−25 ... +70 °C	−20 ... +80 °C	−40 ... +80 °C	
Contact with type of protection EEx ia IIC [1]) for use in hazardous areas (zone 1, zone 21 is pending)						
Type 3776	**-11**	**-12**		**-17**	**-15**	**-16**
Permissible maximum values when connected to a certified intrinsically safe circuit						
Input voltage U_i	16 V	16 V		15 V	45 V	
Input current I_i	25 mA / 52 mA	25 mA / 52 mA		25 mA / 52 mA	–	
Power dissipation P_i	64 mW / 169 mW	64 mW / 169 mW		64 mW / 169 mW	2 W	
Internal capacitance C_i	150 nF	30 nF		100 nF	≈ 0	
Internal inductance L_i	150 µH	100 µH		100 µH	≈ 0	
Ambient temperature in temperature class						
I_i = 52 mA [3]) P_i = 169 mW [3]) T6	−45 ... + 45 °C	−45 ... + 45 °C		−45 ... + 55 °C	T6	−20 ... +60 °C
T5	−45 ... + 60 °C	−45 ... + 60 °C		−45 ... + 70 °C		
T4	−45 ... + 80 °C	−45 ... + 80 °C		−45 ... + 85 °C	T5	−20 ... +70 °C
I_i = 25 mA [3]) P_i = 64 mW [3]) T6	−45 ... + 65 °C	−45 ... + 65 °C		−45 ... + 70 °C		
T5	−45 ... + 80 °C	−45 ... + 80 °C		−45 ... + 80 °C	T4	−20 ... +80 °C
T4	−45 ... +100 °C	−45 ... +100 °C		−45 ... +100 °C		
Contact with type of protection EEx nA II [2]) for use in hazardous areas (zone 2 or 22)						
Type 3776	**-81**	**-82**		**-87**	**-85**	**-86**
Ambient temperature in temperature class						
T6	−45 ... +60 °C	−45 ... +60 °C		−45 ... +60 °C	−45 ... +60 °C	
T5	−45 ... +70 °C	−45 ... +70 °C		−45 ... +70 °C	−45 ... +70 °C	
T4	−45 ... +80 °C	−45 ... +80 °C		−45 ... +80 °C	−45 ... +80 °C	

[1]) II 2 G EEx ia IIC T6 according to EC Type Examination Certificate PTB 98 ATEX 2072
[2]) II 3 G EEx nA II T6 according to Statement of Conformity PTB 02 ATEX 2007 X
[3]) Permissible maximum values of upstream isolating amplifiers

Technical data (continued from page 6)

Pilot valve							
Electrical data							
Type 3776		**-XXX1**	**-XXX2**	**-XXX3**	**-0XX8**	**-0XX6**	**-0XX5**
Nominal signal	U_N	6 V DC max. 27 V [1]	12 V DC max. 25 V [1]	24 V DC max. 32 V [1]	24 V AC max. 36 V [1]	115 V AC max. 130 V [1]	230 V AC max. 255 V [1]
	f_N				48 ... 62 Hz		
Switching point "On"	$U_{+80°C}$	≥ 4.8 V	≥ 9.6 V	≥ 18 V	19 ... 36 V	82 ... 130 V	183 ... 255 V
	$I_{+20°C}$	≥ 1.41 mA	≥ 1.52 mA	≥ 1.57 mA	≥ 1.9 mA	≥ 2.2 mA	≥ 2.6 mA
	$P_{+20°C}$	≥ 5.47 mW	≥ 13.05 mW	≥ 26.71 mW	≥ 0.04 VA	≥ 0.17 VA	≥ 0.46 VA
"Off"	$U_{-25°C}$	≤ 1.0 V	≤ 2.4 V	≤ 4.7 V	≤ 4.5 V	≤ 18 V	≤ 36 V
Impedance	$R_{+20°C}$	2.6 kΩ	5.5 kΩ	10.7 kΩ	approx. 10 kΩ	approx. 40 kΩ	approx. 80 kΩ
Temperature effect		0.4 %/°C	0.2 %/°C	0.1 %/°C	0.1 %/°C	0.05 %/°C	0.03 %/°C
Ambient temperature		−45 ... +80 °C					
Pilot valve with type of protection EEx ia IIC [2] for use in hazardous areas (zone 1, zone 21 is pending)							
Type 3776		**-1XX1**	**-1XX2**	**-1XX3**			
Permissible maximum values for connection to an intrinsically safe circuit							
Output voltage [4]	U_i	25 V / 27 V / 28 V / 30 V / 32 V					
Output current [4]	I_i	150 mA / 125 mA / 115 mA / 100 mA / 85 mA					
Power dissipation	P_i	250 mW	No limitation				
External capacitance	C_i	≈ 0					
External inductance	L_i	≈ 0					
Ambient temperature in temperature class							
	T6	−45 ... +60 °C					
	T5	−45 ... +70 °C					
	T4	−45 ... +80 °C					
Pilot valve with type of protection EEx nA II [3] for use in hazardous areas (zone 2 or 22)							
Type 3776		**-8XX1**	**-8XX2**	**-8XX3**			
Ambient temperature in temperature class							
	T6	−45 ... +60 °C					
	T5	−45 ... +70 °C					
	T4	−45 ... +80 °C					
Pneumatic data							
Type 3776		**-XXX1**	**-XXX2**	**-XXX3**	**-0XX8**	**-0XX6**	**-0XX5**
K_{vs} value [5]		0.01					
Air supply	Medium	Instrument air, free of corrosive particles					
	Pressure	2.2 ... 6.0 bar					
Output signal		1.5 ... 2.5 bar					
Air consumption	"On"	≤ 10 l/h at 1.4 bar air supply					
	"Off"	≤ 60 l/h at 1.4 bar air supply					
Switching time		≤ 50 ms					
Temperature effect		0.4 %/°C					
Switching cycles		$\geq 2 \times 10^7$					

[1] Permissible maximum value at 100 % continued on-time. For Ex versions, the permissible maximum value U_i applies
[2] II 2 G EEx ia IIC T6 according to EC Type Examination Certificate PTB 98 ATEX 2072
[3] II 3 G EEx nA II T6 according to Statement of Conformity PTB 02 ATEX 2007 X
[4] The U_i/I_i values apply to nominal signals 6/12/24 V DC
[5] Air flow at $p_1 = 2.4$ bar and $p_2 = 1.0$ bar can be calculated according to the following equation: $Q = K_{vs} \times 36.22$, expressed in m^3/h

Technical data (continued from page 7)

Type 3776-0XXXX05XXX AS-Interface	
Version [1]	Internal AS-Interface for use in non-hazardous areas (see Mounting and Operating Instructions EB 3776-1 EN) Transmission of power supply and binary signals via a common two-wire cable Connection of maximum two Type SC 3,5-N0 or SJ 3,5-SN Inductive Pick-ups/ one Type NCN3-F24R-N4 Inductive Double Proximity Switch and two pilot valves Watchdog function "On"/"Off" Cable break and short circuit monitoring
Status indicators AS-Interface	LED green "Power supply on" LED red "Cable break, short circuit or interruption of communication"
Initiators	LED yellow "Unattenuated"
Pilot valves	LED yellow "Actuated"
Power supply	24 V DC
Ambient temperature	−25 ... +80 °C
Connection	Cable adapter M 20 × 1.5 for flat cable, 2 wires, or round plug connector M 12 × 1, 4 poles, made of brass, nickel-plated [2]

[1] According to Certification Document No. 28001 of the AS-International Association
[2] The female connector is not included in the delivery (see „Spare parts and accessories", page 14)

Technical data (continued from page 8)

Booster valve							
Type 3777	**-X030**	**-X632**	**-X65X**	**-X25X**	**-X35X**	**-X45X**	**-X55X**
Version	3/2-way function, spring-returned	spring-returned	5/2-way function, spring-returned	detented (2 positions)	5/3-way function, spring-centered, connections 2 and 4 closed	connections 2 and 4 vented	connections 2 and 4 to air supply
K_{vs} value [1] without restrictors	0.20	–	0.30				
with restrictors	–	0.01 ... 0.18	0.01 ... 0.23				
Construction	Seat valve, soft-seated type	Piston valve, metal-to-metal seating, without overlap					
Material							
Enclosure	GD AlSi12, powder-coated, grayish beige RAL 1019						
Gaskets	Silicone rubber	Perbunan, nitrile butadiene rubber					
Filter	Polyethylene						
Screws	Stainless steel 1.4571						
Actuation [2]	Single-actuated			Double-actuated			
Operating medium	Instrument air, free of corrosive particles, or nitrogen						
Operating pressure	2.2 ... 6.0 bar						
Switching cycles	$\geq 10^7$	$\geq 2 \times 10^7$					
Ambient temperature	−45 ... +80 °C						
Connection	G (NPT) $^1/_4$						
Weight approx.	150 g	175 g					

[1] Air flow at $p_1 = 2.4$ bar and $p_2 = 1.0$ bar can be calculated according to the following equation: $Q = K_{vs} \times 36.22$, expressed in m^3/h
[2] Actuation by one or two pilot valves

Connection block		
Type 3777	**-X010**	**-X020**
Version	Single [1]	Double [2]
K_{vs} value [3]	0.01	
Material		
Enclosure	GD AlSi 12, powder-coated, grayish beige RAL 1019	
Gaskets	Perbunan	
Screws	Stainless steel 1.4571	
Ambient temperature	−45 ... +80 °C	
Connection	G (NPT) $^1/_4$	
Weight approx.	150 g	

[1] For single pneumatic actuation of an external Type 3756 3/2 or 5/2-way Booster Valve G (NPT) $^1/_4$
[2] For double pneumatic actuation of an external Type 3756 5/2 or 5/3-way Booster Valve G (NPT) $^1/_4$
[3] Air flow at $p_1 = 2.4$ bar and $p_2 = 1.0$ bar can be calculated according to the following equation: $Q = K_{vs} \times 36.22$, expressed in m^3/h

Dimensions

Type 3776 Limit Switch

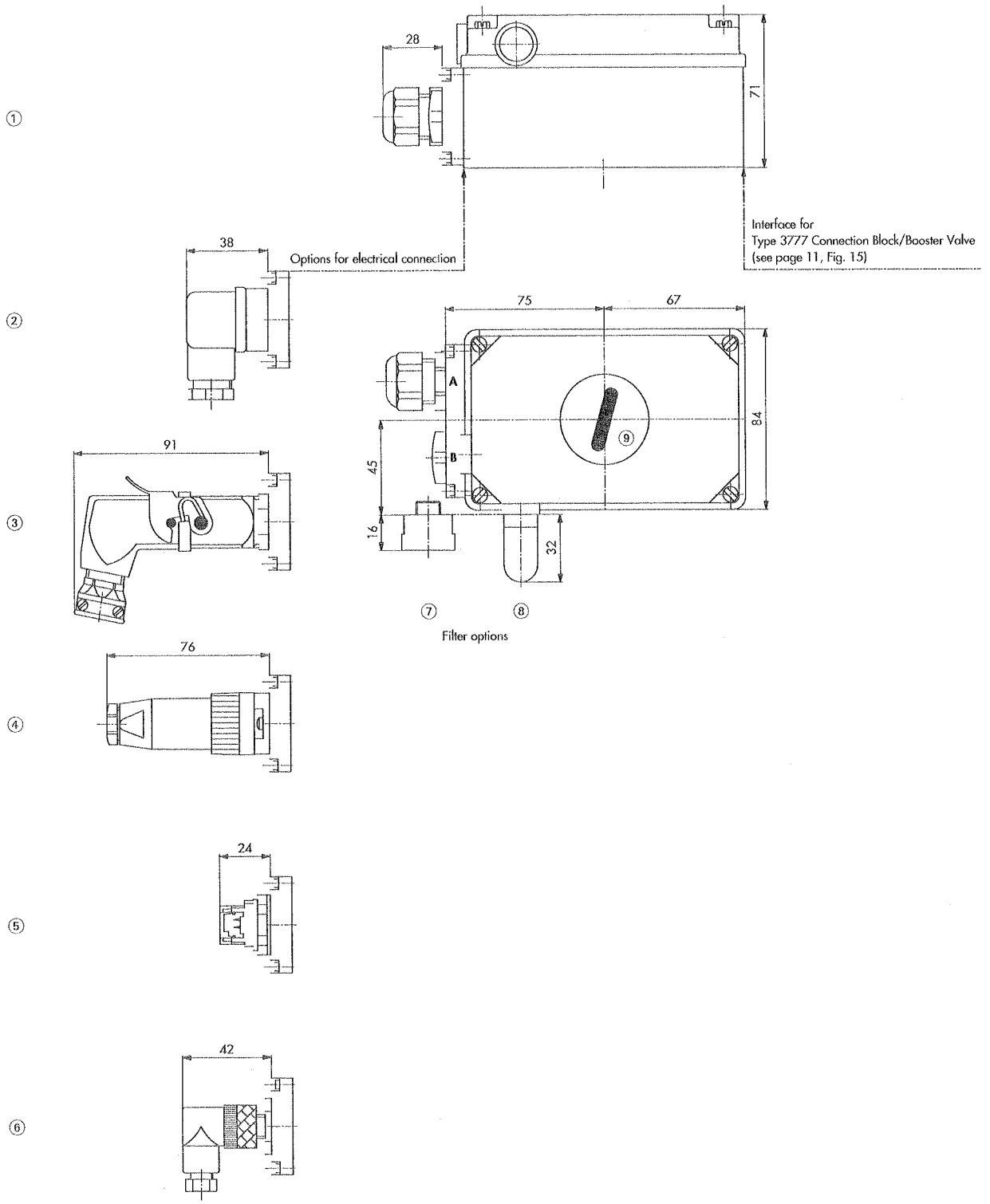

① Cable gland M 20 × 1.5
② Plug-type connector according to EN 175301-803
③ Plug-type connector (manufactured by Harting)
④ Plug-type connector (manufactured by Binder)
⑤ Cable adapter M 20 × 1.5 for flat cable (AS-Interface)
⑥ Round plug connector M 12 × 1 (AS-Interface)
⑦ Filter check valve
⑧ Filter
⑨ Indicating cap (not used on linear actuators)

Fig. 14 · Dimensions in mm

Dimensions

Type 3777 Connection Block/Booster Valve

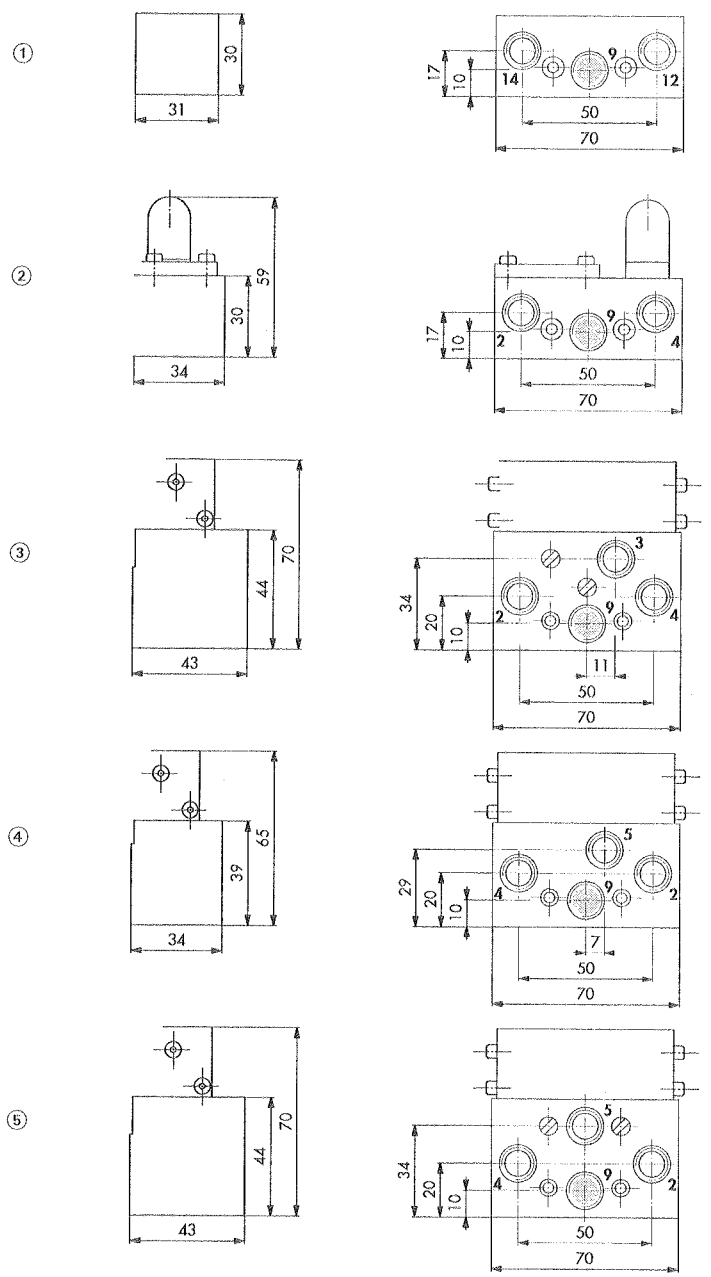

All connections with tapped holes G (NPT) $^1/_4$

Type 3777 Connection Block	Order No.
① Connection block, single	3777-X010
Connection block, double	3777-X020
Type 3777 Booster Valve	**Order No.**
② 3/2-way function, spring-returned	3777-X030
③ 3/2-way function, spring-returned, 1 supply air/1 exhaust air restrictor	3777-X632
④ 5/2-way function, spring-returned	3777-X650
5/2-way function, detented (2 positions)	3777-X250
5/3-way function, spring-centered (connections 2 and 4 closed)	3777-X350
5/3-way function, spring-centered (connections 2 and 4 vented)	3777-X450
5/3-way function, spring-centered (connections 2 and 4 to air supply)	3777-X550
⑤ 5/2-way function, spring-returned, 2 exhaust air restrictors	3777-X653
5/2-way function, detented (2 positions), 2 exhaust air restrictors	3777-X253
5/3-way function, spring-centered (connections 2 and 4 closed), 2 exhaust air restrictors	3777-X353
5/3-way function, spring-centered (connections 2 and 4 vented), 2 exhaust air restrictors	3777-X453
5/3-way function, spring-centered (connections 2 and 4 to air supply), 2 exhaust air restrictors	3777-X553

Fig. 15 · Dimensions in mm

Dimensions

Attachment to rotary actuators according to VDI/VDE 3845 – fixing level 1

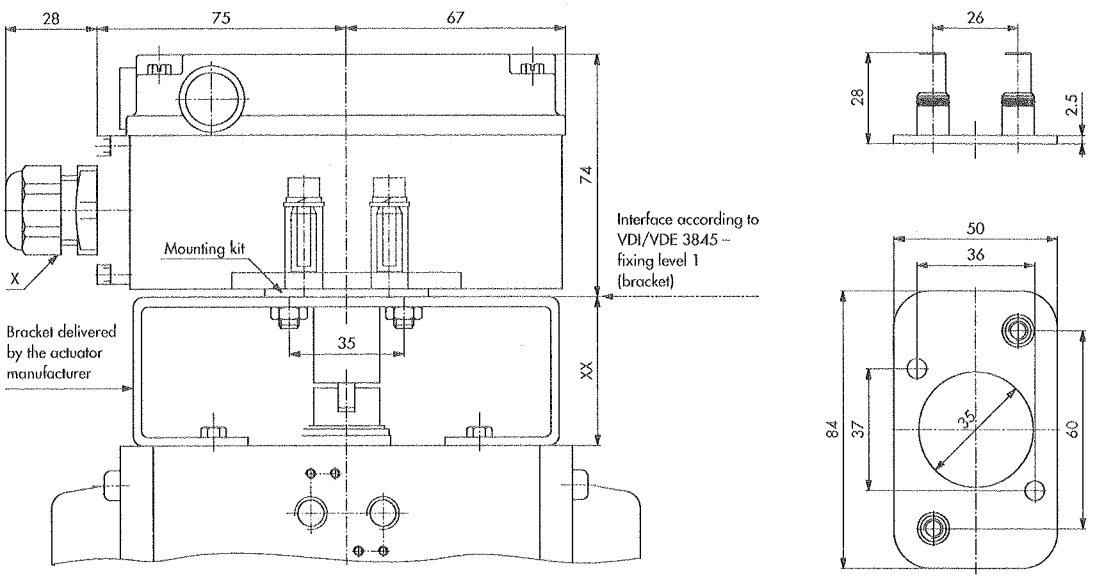

X = For electrical connection options see page 10, Fig.14
XX = Dimension depends on manufacturer

Mounting kit for fixing level 1
Order No. 1400-7041

Fig. 16 · Dimensions in mm

Dimensions

Attachment to rotary actuators according to VDI/VDE 3845 – fixing level 2

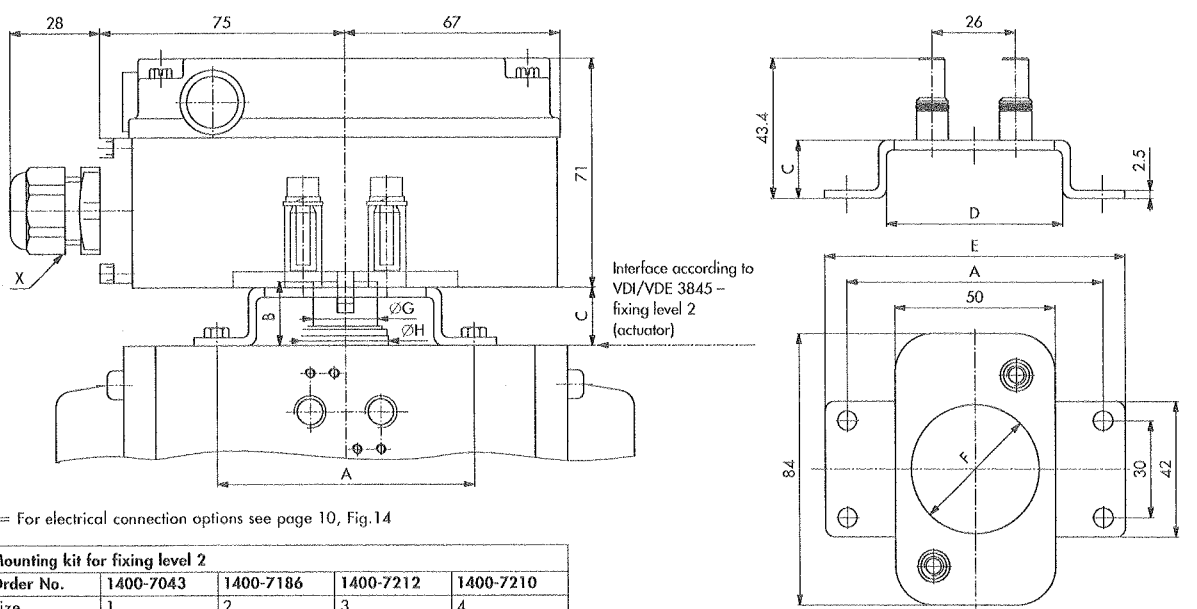

X = For electrical connection options see page 10, Fig.14

Mounting kit for fixing level 2				
Order No.	1400-7043	1400-7186	1400-7212	1400-7210
Size	1	2	3	4
Dimension A	80	80	130	130
Dimension B	20	30	30	50
Dimension C	18	28	28	48
Dimension D	55	55	105	105
Dimension E	94	94	144	144
Dimension F	40	40	48	48
Dimension G	≤ (F – 1)			
Dimension H	≤ (D – 1)			

Fig. 17 · Dimensions in mm

Versions and ordering data

Type 3776 Limit Switch with Type 3777 Connection Block/Booster Valve		**Order No. 3776-**	.	.	.	.	.	.	.	.	.	.	3777-	.	.	.	.
Type 3776 Limit Switch		**Order No. 3776-**	.	.	.	.	.	.	.	.	.	.					
Type of protection	Without explosion protection	(max. +80 °C)	0														
	II 2 G EEx ia IIC T6/T5/T4 1)	(max. +60/+70/+80 °C)	1														
	II 3 G EEx nA II T6/T5/T4 2)	(max. +60/+70/+80 °C)	8														
Contact Versions	Inductive pick-up Type SC 3,5-N0 with LED, 2 wires	(min. −40 °C)		1													
	Type SJ 3,5-SN, 2 wires	(min. −45 °C)		2													
	Type SB 3,5-E2 with LED, 3 wires 3)	(−25 ... +70 °C)	0	3													
	Inductive Double Proximity Switch Type NCN3-F24R-N4 with LED, 2 × 2 wires	(min. −20 °C)		7													
	Electric microswitch, 3 wires 3) 4), with switch-over contact, made of silver	(min. −40 °C)		5													
	with switch-over contact, made of gold	(min. −40 °C)		6													
Quantity	1 inductive or electric limit switch, angle of rotation 0° ... 100°, adjustable 5)				1												
	2 inductive or electric limit switches, angle of rotation 0° ... 100°, adjustable 5)				2												
	3 inductive or electric limit switches, angle of rotation 0° ... 100°, adjustable 5)				3												
	1 inductive double proximity switch, angle of rotation 70°				5												
	angle of rotation 90°				6												
Pilot valve Nominal signal	Without pilot valve					0	0										
	6 V DC, power consumption 5.47 mW					1											
	12 V DC, power consumption 13.05 mW					2											
	24 V DC, power consumption 26.71 mW					3											
	230 V AC, power consumption 0.86 VA		0	.	.	5											
	115 V AC, power consumption 0.42 VA		0	.	.	6											
	24 V AC, power consumption 0.10 VA		0	.	.	8											
	Special voltage					9											
Quantity/ manual override	Without pilot valve					0	0										
	1 pilot valve without manual override						1										
	with pushbutton underneath enclosure cover						2										
	with pushbutton switch underneath enclosure cover						3										
	2 pilot valves 3) without manual override						5										
	with pushbutton underneath enclosure cover						6										
	with pushbutton switch underneath enclosure cover						7										
Electrical connection Terminal connection	Via terminal, 12 poles, and flange plate with 2 tapped holes M 20 × 1.5																
	without cable gland							0	0	0							
	with 1 cable gland made of polyamide, black	(min. −20 °C)						0	1	0							
	with 2 cable glands made of polyamide, black	(min. −20 °C)						0	1	1							
	with 1 cable gland made of polyamide, blue	(min. −20 °C)						0	1	2							
	with 2 cable glands made of polyamide, blue	(min. −20 °C)						0	1	3							
	with 1 cable gland made of brass, nickel-plated, colorless	(min. −45 °C)						0	1	4							
	with 2 cable glands made of brass, nickel-plated, colorless	(min. −45 °C)						0	1	5							
	with 1 EExe cable gland (manufactured by CEAG) made of polyamide, black	(min. −20 °C)						0	1	7							
	with 2 EExe cable glands (manufactured by CEAG) made of polyamide, black	(min. −20 °C)						0	1	8							
Plug-type connection	1 male connector according to EN 175301-803, 4 poles, made of polyamide, black 5) 7)	(min. −20 °C)						0	2	0							
	2 plug-type connectors according to EN 175301-803, 4 poles, made of polyamide, black 5) 8)	(min. −20 °C)						0	2	1							
	1 male connector (manufactured by Harting), 7 poles, made of aluminum, silvery gray 5) 7)	(min. −45 °C)						0	3	0							
	2 male connectors (manufactured by Harting), 7 poles, made of aluminum, silvery gray 5) 7)	(min. −45 °C)						0	3	1							
	1 round plug connector (manufactured by Binder), 7 poles, made of polyamide, black 6) 7)	(min. −20 °C)						0	3	2							
	2 round plug connectors (manufactured by Binder), 7 poles, made of polyamide, black 6) 8)	(min. −20 °C)						0	3	3							
AS-Interface 9) with bus connection	Cable adapter M 20 × 1.5 for flat cable, 2 wires	(min. −25 °C)	0	.	.	.	.	0	5	0							
	Round plug connector M 12 × 1, 4 poles, made of brass, nickel-plated 7)	(min. −25 °C)	0	.	.	.	.	0	5	1							
Degree of protection IP 54	Filter, made of polyethylene (at K_{vs} value 0.20)	(min. −20 °C)									1	1					
IP 65	Filter check valve, made of polyamide (at K_{vs} value 0.01)	(min. −20 °C)									2	1					
	Filter check valve, made of stainless steel (at K_{vs} value 0.01)	(min. −45 °C)									3	1					
Type 3777 Connection Block/Booster Valve		**Order No.**											3777-	.	.	.	.
Connection	G $^{1}/_{4}$													3			
	NPT $^{1}/_{4}$													8			
Version Connection block	Single, K_{vs} value 0.01 10)														0	1	0
	Double, K_{vs} value 0.01 11)														0	2	0
Booster valve	3/2-way function, spring-returned, K_{vs} value 0.20														0	3	0
	3/2-way function, spring-returned, 1 supply air/1 exhaust air restrictor, K_{vs} value 0.01 ... 0.18, adjustable														6	3	2
	5/2-way function, spring-returned, K_{vs} value 0.30														6	5	
	5/2-way function, detented (2 positions), K_{vs} value 0.30														2	5	
	5/3-way function, spring-centered (connections 2 and 4 closed), K_{vs} value 0.30														3	5	
	5/3-way function, spring-centered (connections 2 and 4 vented), K_{vs} value 0.30														4	5	
	5/3-way function, spring-centered (connections 2 and 4 to air supply), K_{vs} value 0.30														5	5	
Restrictors	Without restrictors																0
	1 supply air/1 exhaust air restrictor, K_{vs} value 0.01 ... 0.18, adjustable														6	3	2
	2 exhaust air restrictors, K_{vs} value 0.01 ... 0.23, adjustable														.	5	3

---

1) According to EC Type Examination Certificate PTB 98 ATEX 2072 and GOST Certificate 2002.C312 (1 Ex ia IIC T6 X)
2) According to Statement of Conformity PTB 02 ATEX 2007 X
3) With two pilot valves, a maximum of two 3-wire contacts can be used
4) Maximum permissible operating voltage 50 V
5) Angle of rotation 0° to 180° on request
6) Maximum permissible operating voltage 230 V
7) The female connector is not included in the delivery (see „Spare parts and accessories", page 14)
8) The female connectors are included in the delivery
9) According to Certification Document No. 28001 of the AS-International Association
10) For pneumatic single actuation of an external Type 3756 3/2 or 5/2-way Booster Valve G (NPT) $^{1}/_{4}$
11) For pneumatic double actuation of an external Type 3756 5/2 or 5/3-way Booster Valve G (NPT) $^{1}/_{4}$

Spare parts and accessories

Order No.	Designation
0790-6658	Female connector according to EN 175301-803, type A, made of polyamide, black, IP 65
1400-8298	Female connector (manufactured by Harting), 7 poles, made of aluminum, silvery gray, IP 65
8801-2810	Sensor connecting cable, 2 wires, length 3 m, blue, with angle connector M 12 × 1, 4 poles, IP 68
8831-0716	Female connector (manufactured by Binder), 7 poles, made of PBT GV, black, IP 67
8831-0865	Female connector M 12 × 1, 4 poles, angle type, made of polyamide, black, IP 67
8808-0138	Cable gland M 20 × 1.5 made of brass, nickel-plated
8808-0178	EExe cable gland M 20 × 1.5 (manufactured by CEAG) made of polyamide, black
8808-1011	Cable gland M 20 × 1.5 made of polyamide, black
8808-1012	Cable gland M 20 × 1.5 made of polyamide, blue
0310-2149	Adapter M 20 × 1.5 / NPT $^1/_2$i made of aluminum, powder-coated, grayish-beige RAL 1019
1089-1159	Enclosure cover made of polycarbonate, transparent, connection G $^1/_4$ for filter/filter check valve
1890-4663	Platine for AS-Interface
3994-0158	Cable break protection device with enclosure for top hat rail 35, IP 20 (for Type 3776-XXX1 with 6 V DC pilot valve)
1790-7253	Filter check valve made of stainless steel, connection G $^1/_4$, IP 65
1790-7408	Filter check valve made of polyamide, connection G $^1/_4$, IP 65
8504-0066	Filter made of polyethylene, connection G $^1/_4$, IP 54
	Mounting kits
1400-7216	Mounting kit made of stainless steel for Type 3278 Rotary Actuators, actuator size 160 cm^2
1400-7217	Mounting kit made of stainless steel for Type 3278 Rotary Actuators, actuator size 320 cm^2
1400-7041	Mounting kit for rotary actuators according to VDI/VDE 3845 – fixing level 1
0469-0017	Driver for mounting kit with fixing level 1
	Mounting kit made of stainless steel for rotary actuators according to VDI/VDE 3845 – fixing level 2
1400-7043	Size 1, hole spacing A = 80 mm, shaft stub length B = 20 mm
1400-7186	Size 2, hole spacing A = 80 mm, shaft stub length B = 30 mm
1400-7212	Size 3, hole spacing A = 130 mm, shaft stub length B = 30 mm
1400-7210	Size 4, hole spacing A = 130 mm, shaft stub length B = 50 mm
1400-7220	Mounting kit made of stainless steel for Type 3277 Linear Actuators, actuator size 240/350 cm^2
1400-7221	Mounting kit made of stainless steel for Type 3277 Linear Actuators, actuator size 700 cm^2
1400-7219	Mounting kit made of stainless steel for Type 3277-5 Linear Actuators (external)
1400-7222	Mounting kit made of stainless steel for Type 3277-5 Linear Actuators (internal), connection G $^1/_4$
1400-7223	Mounting kit made of stainless steel for Type 3277-5 Linear Actuators (internal), connection NPT $^1/_4$
0430-1544	Seal hose for attachment to Type 3277-5 Linear Actuators (internal)
1400-7730	Mounting kit made of stainless steel for Type 3241 Control Valve, nominal size DN 15 ... 100
1400-7735	Mounting kit made of stainless steel for Type 3351 Valve, nominal size DN 15 ... 50
1400-7736	Mounting kit made of stainless steel for Type 3351 Valve, nominal size DN 65 ... 80
1400-7737	Mounting kit made of stainless steel for Type 3351 Valve, nominal size DN 100
1400-XXXX	Mounting kit made of stainless steel for stem valves, nominal size DN 15 ... 150 (on request)
1400-XXXX	Mounting kit made of stainless steel for Series 250 and 280, nominal size DN 15 ... 400 (on request)
1400-XXXX	Mounting kit made of stainless steel for Types 324X Control Valves, nominal size DN 200 ... 300, and Types 325X/328X Control Valves, nominal size DN 15 ... 400 (on request)

(Specifications subject to change without notice.)

SAMSOMATIC

AUTOMATIONSSYSTEME
GMBH

– a subsidiary of SAMSON AG

Weismüllerstraße 20–22
60314 Frankfurt am Main · Germany

Phone: +49 69 4009-0
Fax: +49 69 4009-1644
E-mail: samsomatic@samson.de
Internet: http://www.samsomatic.de

2004-03 · T 3776 EN

Index of Revisions

Rev.	Sheet	Prepared, revised		Checked	Approved			Remark, kind of revision
		Name	Date	Name	Name	Date	Status	
00	**1 to 184**	**V12/sro**	**2004-09-01**	**V12/lf**	**V12/di**	**2004-09-10**		**First Issue**
01	**200**	**V12/sro**	**2005-06-01**	**V12/lf**	**V12/di**	**2005-06-10**	**FI**	**FINAL ISSUE**