POS	PART NAME	MATERIAL	No.
1	NAMEPLATE	STAINLESS STEEL	1
2	BOLTS	A320 B8 cl.2	4
3	BONNET	A182 F321	1
4	GASKET	A479 Tp316 GRAPHITE	1
5	SPRING	A479 Tp316	1
6	PISTON	A479 TP321	1
7	SEAT	A479 TP321	1
8	BODY	A182 F321	1

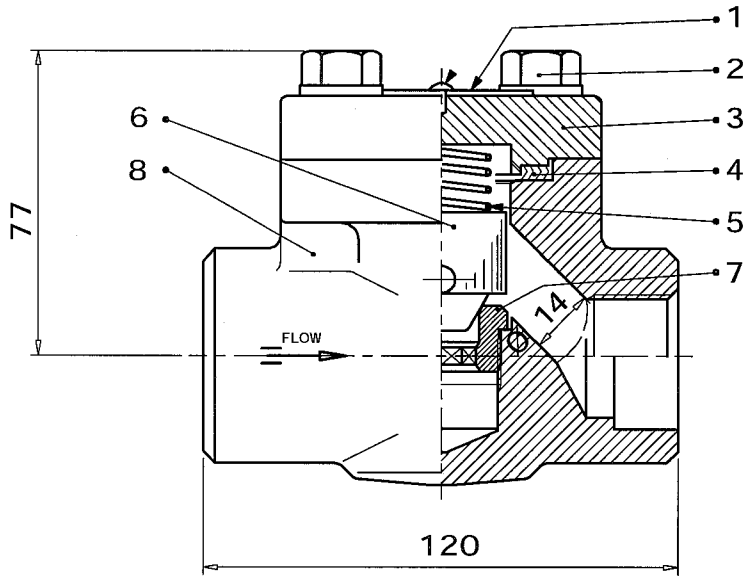

General Notes

-SW ACCORDING TO ANSI B16.11.

4567580-000/1.69690

DATE:	DATE:	DATE:	DATE: 12/10/2004
REV.	REV.	REV.	REV. 0

CUSTOMER: SIEKMANN ECONOSTO GMBH &

P.O. No.: 9004550OP ZAGROS II -LURGI-

TAG No.: RV650 - 00190

ITEM No.: 19

DOCUMENT: 045913 SHEET: 019

DESCRIPTION: **PISTON CHECK VALVE BC RB 1" F321/F321 1500 LBS SW**

CLASS: 1500

SIZE: 1" WEIGHT KG: 4,2

DRAW: RAOUL-PARSAN

CHECKED: Fogaroli

API 6A 0425
API 6D 0251
API 600 0003

LVF FORGED STEEL VALVES

FIG. No.: **9BR 305**

JOB: 045913

POS. 019

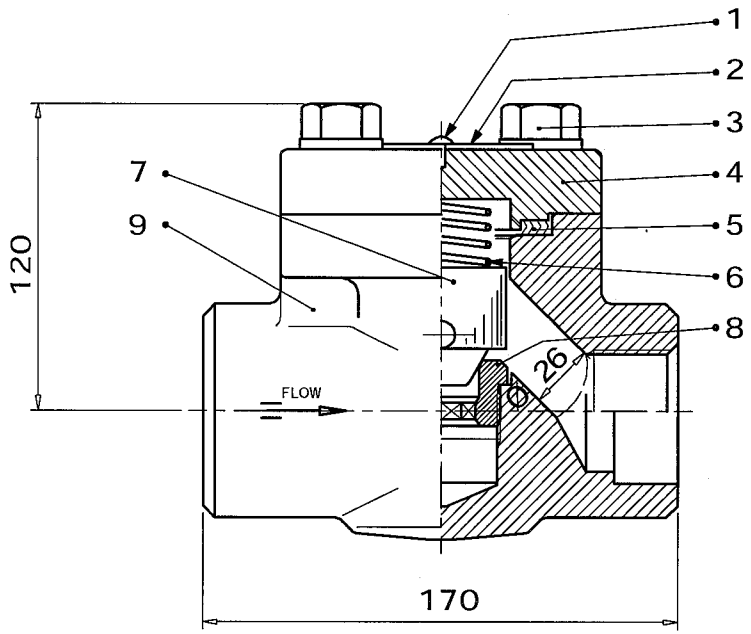

POS	PART NAME	MATERIAL	No.
1	RIVET	ASTM A105N	1
2	NAMEPLATE	STAINLESS STEEL	1
3	BOLTS	A320 B8 cl.2	4
4	BONNET	A182 F321	1
5	GASKET	A479 Tp316 GRAPHITE	1
6	SPRING	A479 Tp316	1
7	PISTON	A479 TP321	1
8	SEAT	A479 TP321	1
9	BODY	A182 F321	1

General Notes

-SW ACCORDING TO ANSI B16.11.

4567580-000/1.69690

DATE:	DATE:	DATE:	DATE: 12/10/2004
REV.	REV.	REV.	REV. 0

CUSTOMER: SIEKMANN ECONOSTO GMBH &

P.O. No.: 9004550OP ZAGROS II -LURGI-

TAG No.: RV650 - 00200

ITEM No.: 20

DOCUMENT: 045913 SHEET: 020

DESCRIPTION: **PISTON CHECK VALVE BC RB**

1.1/2" F321/F321 1500 LBS SW

CLASS: 1500

SIZE: 1.1/2" WEIGHT KG: 9,4

DRAW: RAOUL-PARSAN

CHECKED: Fogaroli

API 6A 0425
API 6D 0251
API 600 0003

FIG. No.: **9BR 307**

JOB: 045913

POS. 020

POS	PART NAME	MATERIAL	No.
1	NAMEPLATE	STAINLESS STEEL	1
2	BOLTS	A320 B8 cl.2	4
3	BONNET	A182 F321	1
4	GASKET	A479 Tp316 P.T.F.E.	1
5	SPRING	A479 Tp316	1
6	PISTON	A479 TP321	1
7	SEAT	A479 TP321	1
8	BODY	A182 F321	1

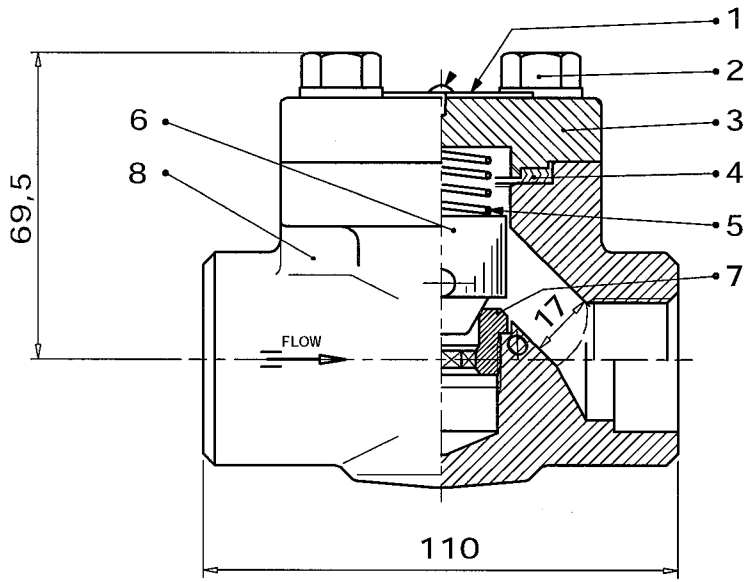

General Notes

-SW ACCORDING TO ANSI B16.11.

4567580-000/1.69690

DATE:	DATE:	DATE:	DATE: 12/10/2004
REV.	REV.	REV.	REV. 0

CUSTOMER: SIEKMANN ECONOSTO GMBH &

P.O. No.: 9004550OP ZAGROS II -LURGI-

TAG No.: RV651 - 00210

ITEM No.: 21

DOCUMENT: 045913 SHEET: 021

DESCRIPTION: **PISTON CHECK VALVE BC RB 1" F321/F321 800 LBS SW**

CLASS: 800

SIZE: 1" WEIGHT KG: 2,6

DRAW: RAOUL-PARSAN

CHECKED: Fogaroli

API 6A 0425
API 6D 0251
API 600 0003

LVF FORGED STEEL VALVES

FIG. No.: **BR 305**

JOB: 045913

POS. 021