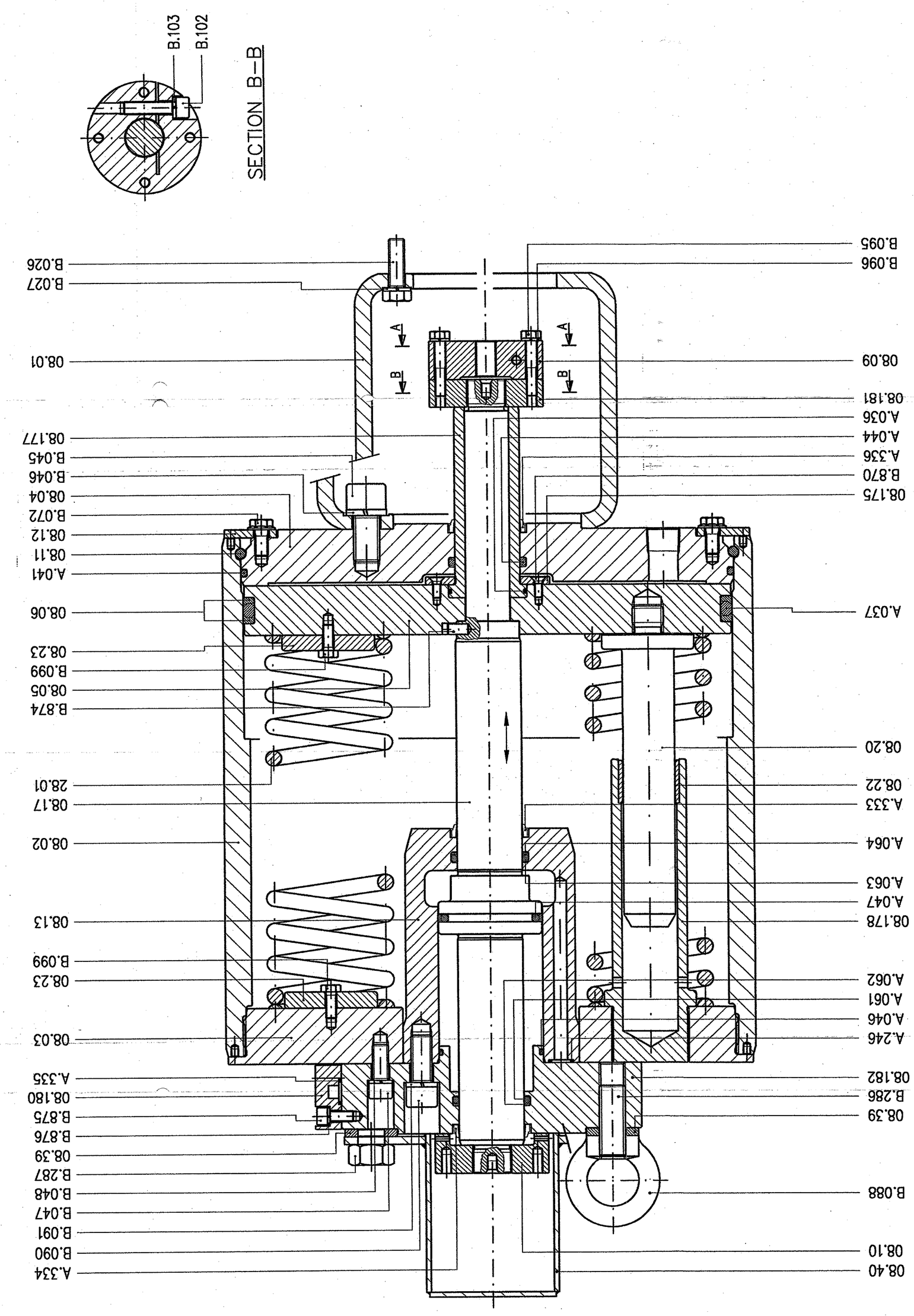

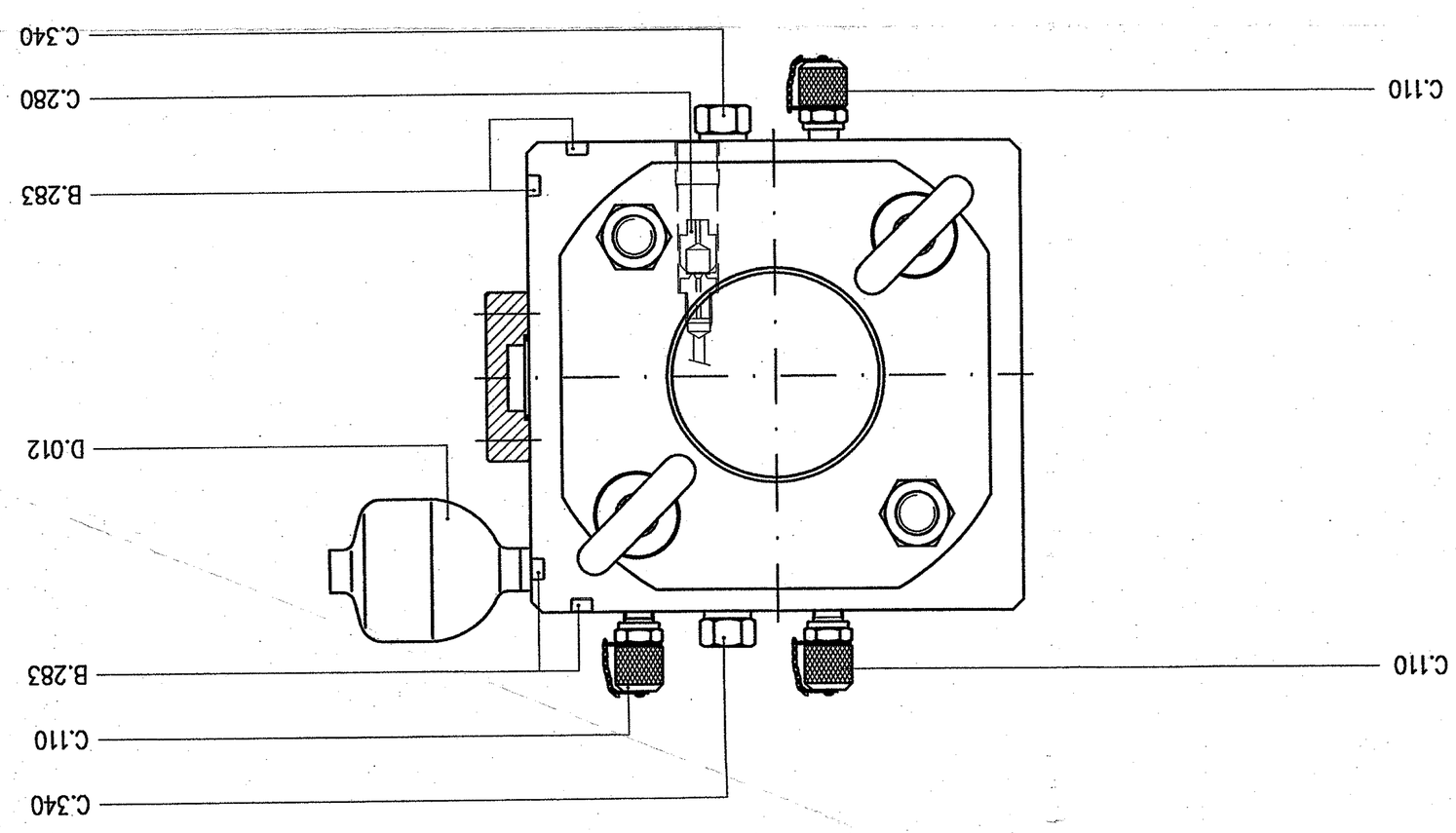

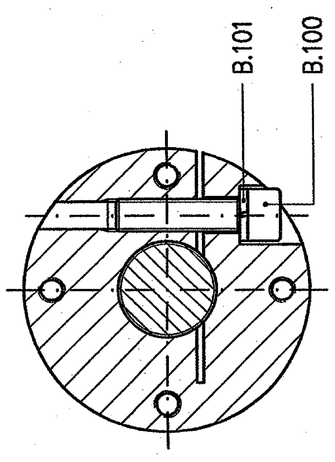

Client : LURGI
P.O. No. : 4553278–000/1.69666/134
Project : 4TH MEGAMETHANOL PROJECT
Location : IRAN

Serial No	Tag no.	Item no.
34987–001	PV101331	1

FOR ASSEMBLY DRAWING
OF VALVE SEE
DOC.No.: 34987–150

FOR PARTSLIST
OF ACTUATOR SEE
DOC.No.: 34987–153

rev.	date	by	c'kd	eng	description
C					
B					
A					
0	06 juni 2003	RJER	HW		For Approval

This drawing is the property of Makveld valves Gouda Holland it may not be copied, nor reproduced, or be shown to third persons without written authorization of Makveld valves. (Parts of) this drawing might contain Patented items.
©Makveld valves bv, Gouda, The Netherlands. 2003

ASSEMBLY DRAWING of pneum. actuator

M575–1VS–4 with hydr. cylinder

Makveld valves

Makveld w.o. 14/34987
quantity 1 x
drawing no. 34987–152

030605.1607 1 RJER

1–123863