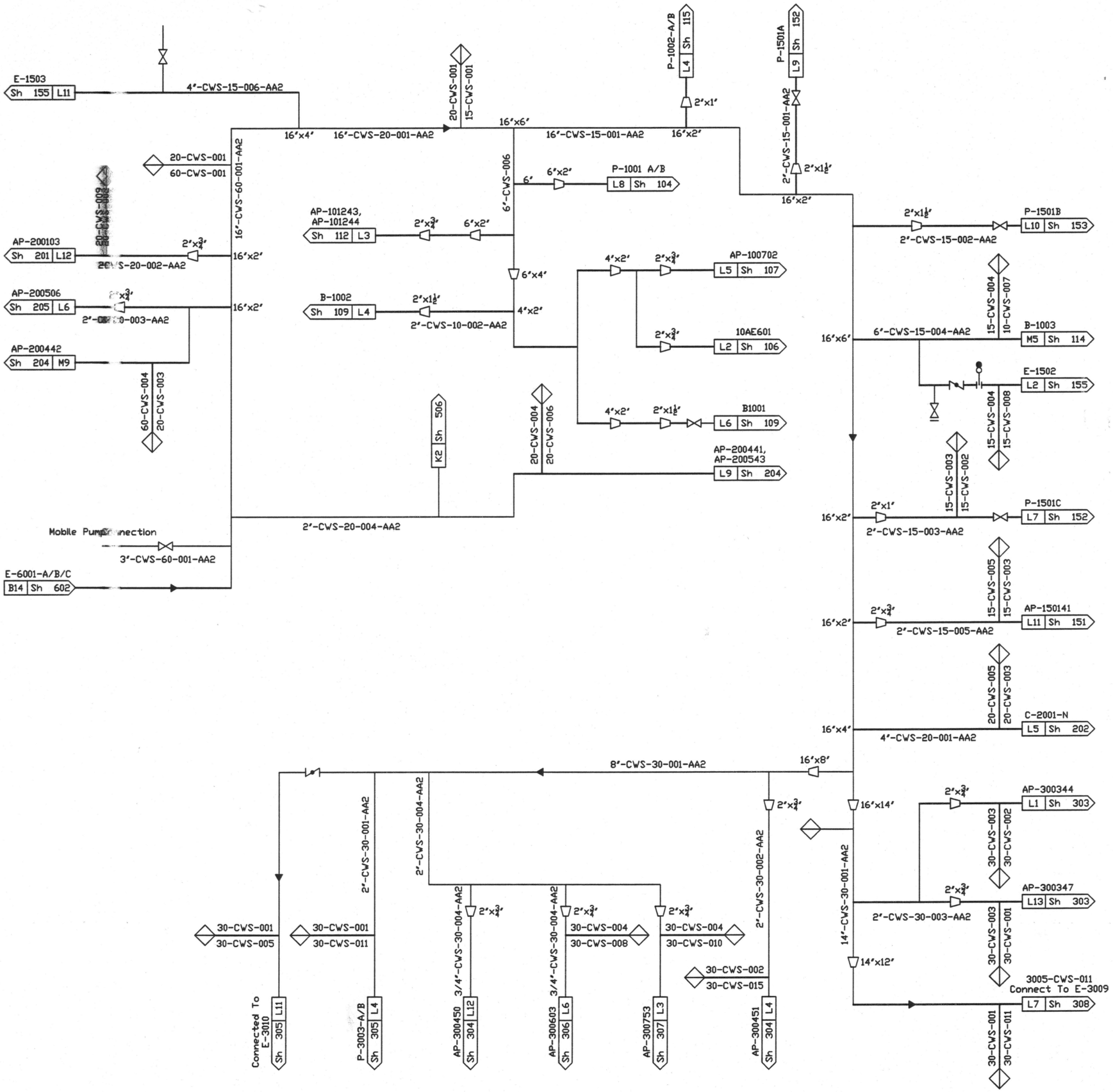

ZPC Doc. Center

As Built

Rev.	LF/PS	Name	Date	Name	Name	Date	Status	Kind of Revision
0		R.P	24.06.13	A.R	M.N	24.06.13	Asbuilt	
		Prepared/Changed		Checked	Approved			

Copying of this document, and giving it to others and the use or communication of the contents thereof, are forbidden without express authority by ZAGROS CO. Offenders are liable to the payment of damages. All rights are reserved in the event of the grant of a patent or the registration of a utility model or design.

ZAGROS PETROCHEMICAL COMPANY

DISPOSITION

- [ ] NO COMMENT
- [ ] COMMENTS AS MARKED. FABRICATION CAN PROCEED ACCORDINGLY. REVISED DOC'T TO BE ISSUED EITHER FOR REVIEW OR AS FINAL CERTIFIED. HOWEVER ZAGROS WILL CHECK THIS REVISED DOCUMENT FOR PROPER INCORPORATION.
- [ ] REJECTED DOCUMENT TO BE REISSUED.
- [ ] USE FOR INFORMATION ONLY.

SIGNATURE DATE

ZAGROS REVIEW & COMMENTS DOES NOT ABSOLVE THE VENDOR OF THE RESPONSIBILITY FOR THE CORRECT DESIGN, MANUFACTURING AND OPERATION OF EQUIPMENT.

Nomination:

OWNER : NATIONAL PETROCHEMICAL COMPANY
ZAGROS PETROCHEMICAL COMPLEX
شرکت پتروشیمی زاگرس

PROJECT : 4th METHANOL PROJECT

SWEET COOLING WATER SUPPLY
DISC. ABOVE GROUND UTILITY
DISTRIBUTION DIAGRAM

UNIT 600

UDD SHEET 612

Job name: MEGA METHANOL IRAN

Document No.

Rev. 0

DENOMINATION: P&ID-Diagram

DRAWING NUMBER

SHEET 1 SH.