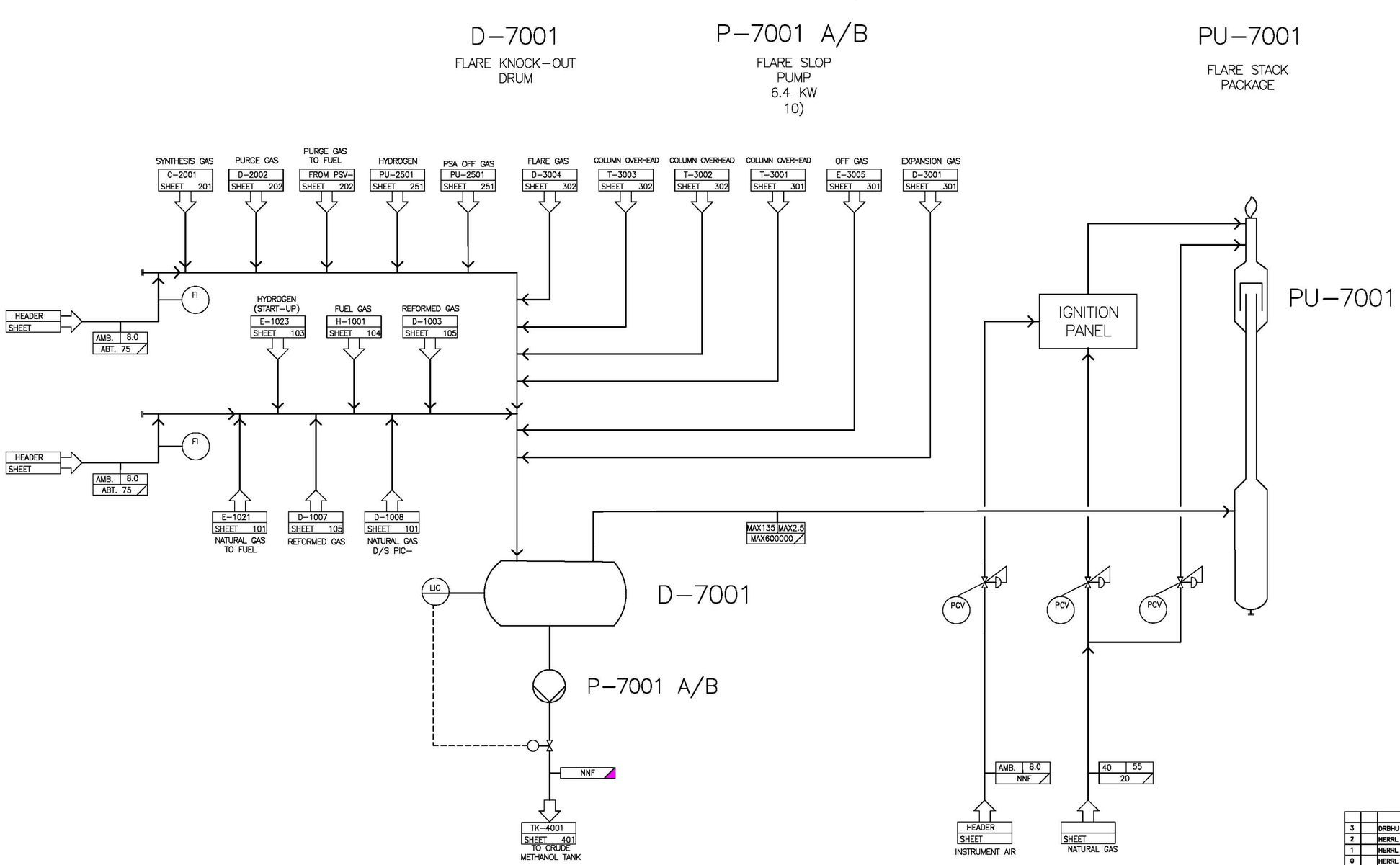

NOTES:

1) PRESSURES ARE ABSOLUTE UNLESS OTHERWISE INDICATED
2) STANDARD VAPOR CONDITIONS: 15°C, 1.01325 BAR (23.6449 SM3/KMOL)
3) NFF: NORMALLY NO FLOW:
4) ELEVATION OF FLARE STACK APROX.40 M HIGHER THAN ELEVATION OF D-7001 AND PROCESS UNIT.
5) DISTANCE OF PU-7001 FROM D-7001 APPROX.1000 M.
6) TIE IN OFF DIFFERENT GAS STREAMS TO FLARE HEADER IS SHOWN ONLY PRELIMINARY
7) DELETED
8) NITROGEN FLARE HEADER PURGE TO BE PROVIDED AT DEAD END OF PLANT MAIN HEADER LINES (NUMBER OF PURGE LOCATIONS AND FLOWS TO BE RECONFIRMED AT DETAIL ENGINEERING)
9) FLOW AND CONDITIONS TO BE RECONFIRMED
10) RATED POWER

LEGEND.

LIQUIDS

STREAM NO. | °C | BAR | KG/H

°C | BAR | KG/H

KG/H

STREAM NO. | °C | BAR

GASES

STREAM NO. | °C | BAR | SM3/H

°C | BAR | SM3/H

SM3/H

STREAM NO. | °C | BAR

STEAM

°C | BAR | KG/H

KG/H

TEMPERATURE

°C

TEMP./PRESSURE

°C | BAR

REV.	LF/PS	NAME	DATE	NAME	NAME	DATE	STATUS	KIND OF REVISION
	PREPARED/CHANGED			CHECKED	APPROVED			
3		DRBHU	27.02.04	ZMM	LAE	27.02.04	AFD	REV. FLARE RELOCATION
2		HERRL	27.11.01	ZMM	DRHJ	27.11.01	AFD	REVISION, ZAGROS COMMENTS INCLUDED
1		HERRL	23.10.01	ZMM	DRHJ	23.10.01	AFD	REVISION, ZAGROS COMMENTS INCLUDED
0		HERRL	13.07.01	ZMM	KRER	13.07.01	FI	FIRST ISSUE

COPYING OF THIS DOCUMENT, AND GIVINGIT TO THE OTHERS AND THE USE COMMUNICATION OF THE CONTENTS THEREF, ARE FORBIDDEN WITHOUT EXPRESS AUTHORITY BY LURGI/PIDEC. OFFENDERS ARE LIABLE TO THE PAYMENT OF DAMAGES. ALL RIGHTS ARE RESERVED IN THE EVENT OF THE GRANT OF THE PATENT OR THE REGISTRATION OF THE UTILITY MODEL OR DESIGN.

ZAGROS PETROCHEMICAL COMPANY

DISPOSITION:

- [ ] NO COMMENT
- [ ] COMMENTS AS MARKED. FABRICATION CAN PROCEED ACCORDINGLY. REVISED DOC'T TO BE ISSUED EITHER FOR REVIEW OR AS FINAL CERTIFIED. HOWEVER ZAGROS WILL CHECK THIS REVISED DOCUMENT FOR PROPER INCORPORATION.
- [ ] REJECTED DOCUMENT TO BE REISSUED.
- [ ] USE FOR INFORMATION ONLY.

SIGNATURE DATE

ZAGROS REVIEW & COMMENTS DOES NOT AB-SOLVE THE VENDOR OF THE RESPONSIBILITY FOR THE CORRECT DESIGN, MANUFACTURING AND OPERATION OF EQUIPMENT.

SCALE: | ORIGINAL SIZE: A1

NOMINATION:

BASIC DOCUMENT:

DCC | DG VT | DL-NO. 011430

JOB NAME: 4th METHANOL PLANT

OWNER: NATIONAL PETROCHEMICAL COMPANY
ZAGROS PETROCHEMICAL COMPLEX
شرکت پتروشیمی زاگرس

PROJECT: 4th METHANOL PROJECT

OWNER: | CONTRACTOR: | DWG. NO. DIG-PR-021 | REV. 3

CONTRACTOR: PETROCHEMICAL INDUSTRIES DESIGN & ENGINEERING COMPANY
شرکت طراحی ومهندسی صنایع پتروشیمی

ZPC PROJ.NO. 40404277
PIDEC PROJ.NO. 1175
DWG. NO. | REV.

ITG engineering Lurgi

FLARE SYSTEM

UNIT 700

PROCESS FLOW DIAGRAM SHEET 701

LURGI JOB NO: 169666-01 | LURGIDOCUMENT NO: 02033 | REV. 3

EDV-IDNET-NO.: IGS7 E:\PIPE\6966601PFD\RUI D-02033.PID 006 29.03.04 VCK IGW61