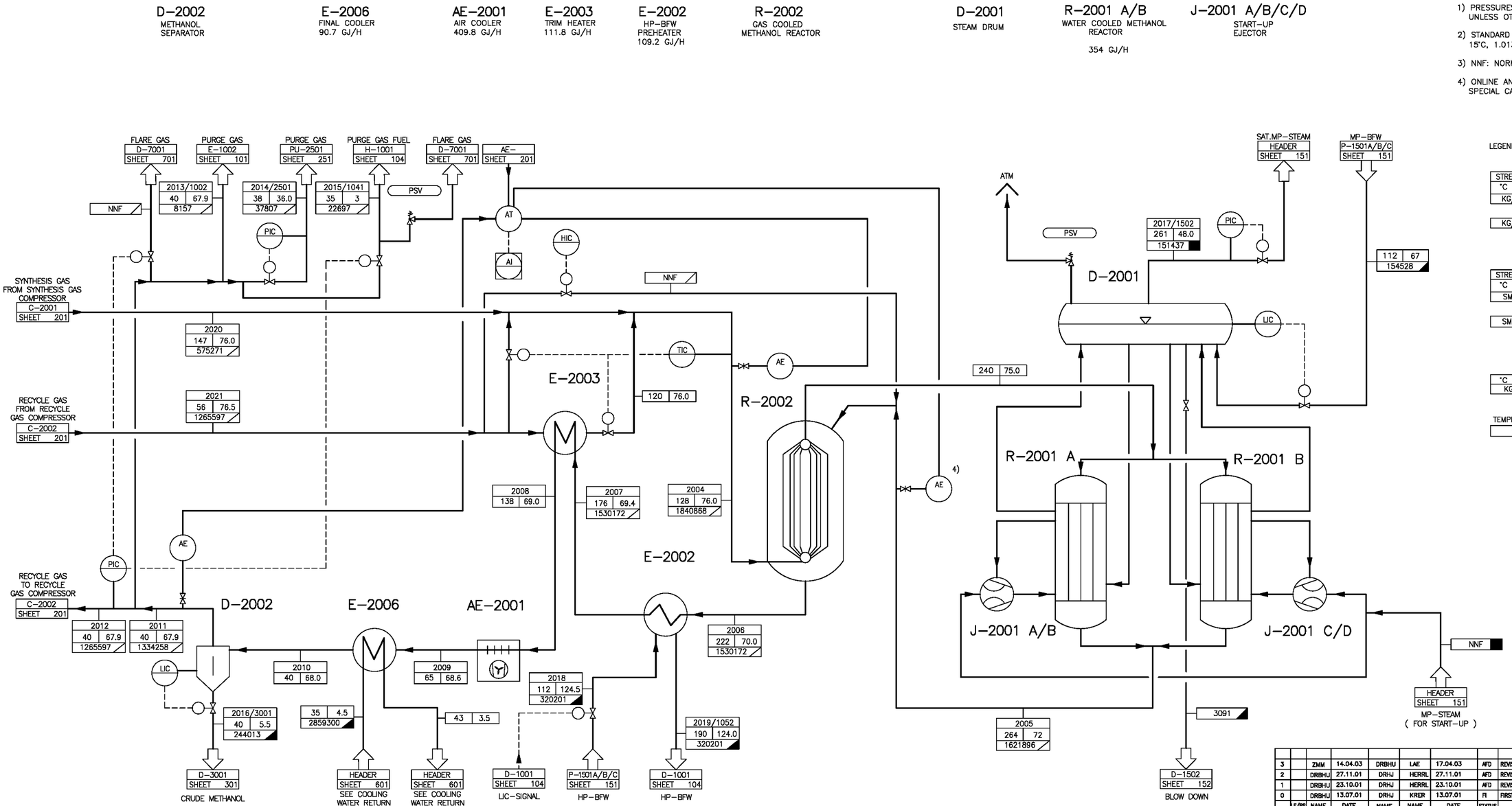

NOTES:

1) PRESSURES ARE ABSOLUTE UNLESS OTHERWISE INDICATED
2) STANDARD VAPOR CONDITIONS: 15°C, 1.01325 BAR (23.6449 SM3/KMOL)
3) NNF: NORMALLY NO FLOW
4) ONLINE ANALYSIS ONLY IN SPECIAL CASES

LEGEND :

LIQUIDS: STREAM NO. | °C | BAR | KG/H

GASES: STREAM NO. | °C | BAR | SM3/H

STEAM: °C | BAR | KG/H

TEMPERATURE: °C

TEMP./PRESSURE: °C | BAR

Stream No.:		2004		2005		2006		2007		2008		2009		2010		2011		2012		2013/1002		2014/2501		2015/1041		2016/3001		2017/1502		2018		2019/1052		2020		2021	
Process Stream		Reactor Inlet Gas to R-2002		Methanol Gas ex R-2001		Methanol Gas ex R-2002		Methanol Gas ex E-2002		Methanol Gas ex E-2003		Methanol Gas exAE-2001		Methanol Gas ex E-2006		Recycle Gas ex D-2002		Recycle Gas to C-2002		Purge Gas to Unit 100		Purge Gas to Unit 250		Purge Gas to Fuel System		Crude Methanol to Unit 300		MP Steam to Header		HP-BFW to Unit 150		HP-BFW to Unit 100		Synthesis Gas from R-2002		Recycle Gas to E-2003	
Phase		Vapor		Vapor		Vapor		Vapor		Mixed(Liquid Vapor)		Mixed(Liquid Vapor)		Mixed(Liquid Vapor)		Vapor		Vapor		Vapor		Vapor		Vapor		Mixed(Liquid Vapor)		Vapor		Liquid		Liquid		Vapor		Vapor	
Comp.	Molweight	kmol/h	mol %	kmol/h	mol %	kmol/h	mol %	kmol/h	mol %	kmol/h	mol %	kmol/h	mol %	kmol/h	mol %	kmol/h	mol %	kmol/h	mol %	kmol/h	mol %	kmol/h	mol %	kmol/h	mol %	kmol/h	mol %	kmol/h	mol %	kmol/h	mol %	kmol/h	mol %	kmol/h	mol %	kmol/h	mol %
CO2	44.010	6610.0	8.49	5459.9	7.96	5170.5	7.99	5170.5	7.99	5170.5	7.99	5170.5	7.99	5170.5	7.99	5036.6	8.93	4777.4	8.93	30.8	8.93	142.7	8.93	85.7	8.93	134.0	1.62							1832.7	7.53	4777.4	8.93
CO	28.010	6757.8	8.68	3277.5	4.78	1627.3	2.51	1627.3	2.51	1627.3	2.51	1627.3	2.51	1627.3	2.51	1623.2	2.88	1539.6	2.88	9.9	2.88	46.0	2.88	27.6	2.88	4.1	0.05							5218.2	21.45	1539.6	2.88
H2	2.016	50298.4	64.61	39887.4	58.15	35718.8	55.19	35718.8	55.19	35718.8	55.19	35718.8	55.19	35718.8	55.19	35670.7	63.21	33835.1	63.21	218.1	63.21	1010.7	63.21	606.8	63.21	48.1	0.58							16463.3	67.67	33835.1	63.21
CH4	16.043	7370.9	9.47	7370.9	10.75	7370.9	11.39	7370.9	11.39	7370.9	11.39	7370.9	11.39	7370.9	11.39	7336.6	13.00	6959.1	13.00	44.9	13.00	207.9	13.00	124.8	13.00	34.3	0.41							411.9	1.69	6959.1	13.00
N2	28.016	6264.0	8.05	6264.0	9.13	6264.0	9.68	6264.0	9.68	6264.0	9.68	6264.0	9.68	6264.0	9.68	6252.5	11.08	5930.7	11.08	38.2	11.08	177.2	11.08	106.4	11.08	11.5	0.14							333.3	1.37	5930.7	11.08
O2	32.000																																				
H2O	18.015	76.0	0.10	1228.1	1.79	1517.5	2.34	1517.5	2.34	1517.5	2.34	1517.5	2.34	1517.5	2.34	18.5	0.03	17.8	0.03	0.1	0.03	0.5	0.03	0.3	0.03	1499.0	18.10	8406.2	100.00	17774.1	100.00	17774.1	100.00	60.4	0.25	17.8	0.03
CH3OH	32.042	288.9	0.37	4919.3	7.17	6858.9	10.60	6050.9	10.60	6858.9	10.60	6858.9	10.60	6858.9	10.60	304.5	0.54	288.9	0.54	1.9	0.54	8.6	0.54	5.2	0.54	6540.9	79.00									288.9	0.54
C2H6	30.069																																				
C3H8	44.096																																				
C4H10	58.123																									<0.1	<0.1										
C5H12	72.151																									<0.1	<0.1										
Argon	39.948	186.8	0.24	186.8	0.27	186.8	0.29	186.8	0.29	186.8	0.29	186.8	0.29	186.8	0.29	186.5	0.33	176.9	0.33	1.1	0.33	5.3	0.33	3.2	0.33	0.3	<0.1							9.9	0.04	176.9	0.33
Low Boilers																										2.9	0.04										
High Boilers																										4.5	0.05										
Total Flow	kmol/h	77854.9		68594.0		64714.8		64714.8		64714.8		64714.8		64714.8		56429.1		53525.2		345.0		1599.0		959.9		8279.8		8406.2		17774.1		17774.1		24329.7		53525.2	
Total Flow	kg/h	893453		893448		893448		893446		893446		893446		893448		649433		618013		3971		18402		11047		244013		151437		320201		320201		277440		618013	
Total Flow	Sm³/h	1840868		1621896		1530172		1530172								1334258		1265597		8157		37807		22697										575271		1265597	
Molweight	kg/kmol	11.476		13.025		13.806		13.806		26.745/13.841		29.288/11.687		29.497/11.444		11.509		11.509		11.509		11.509		11.509		29.546/26.053		18.015		18.015		18.015		11.403		11.509	
Stand.Dens.	kg/Sm³	0.49		0.55		0.58		0.58		831.92/0.57		805.62/0.49		803.36/0.48		0.49		0.49		0.49		0.49		0.49		814.21/1.10		0.80		998.57		998.57		0.48		0.49	
Eff.Density	kg/m³	25.70		20.76		23.36		25.69		704.11/27.63		758.54/28.35		782.03/29.76		29.89		29.89		29.89		16.04		1.35		787.76/5.59		24.29		955.82		883.32		24.32		31.92	
Specific Heat	kJ/kg°C	2.81		2.76		2.67		2.63		4.27/2.61		4.09/2.78		4.08/2.80		2.79		2.79		2.79		2.74		2.67		2.78/1.35		4.13		4.20		4.40		2.73		2.81	
Viscosity	cP	0.017		0.020		0.019		0.017		0.145/0.016		0.315/0.014		0.437/0.013		0.014		0.014		0.014		0.013		0.013		0.489/0.014		0.019		0.249		0.141		0.018		0.014	
Enthalpy	GJ/h	511.73		996.57		949.39		840.21		728.44		318.67		227.95		222.45		211.00		1.36		6.30		3.78		26.30		423.44		152.74		260.94		162.75		237.21	
Temp.	°C	128		264		222		176		138		65		40		40		40		40		38		35		38		281		112		190		147		56	
Pressure	bar ab	76.0		72.0		70.0		69.4		69.0		68.6		68.0		67.9		67.9		67.9		38.0		3.0		5.5		48.0		124.5		124.0		76.0		76.5	
Liquid Molar Fraction										0.01		0.12		0.13												0.98				1.00		1.00					

REV.	LF/PS	NAME	DATE	NAME	NAME	DATE	STATUS	Kind of Revision
		Prepared/Changed		Checked	Approved			
3		ZMM	14.04.03	DRBHU	LAE	17.04.03	AFD	REVISION ACC. DETAIL DESIGN
2		DRBHU	27.11.01	DRHJ	HERRIL	27.11.01	AFD	REVISION ZAGROS COMMENTS INCLUDED
1		DRBHU	23.10.01	DRHJ	HERRIL	23.10.01	AFD	REVISION ZAGROS COMMENTS INCLUDED
0		DRBHU	13.07.01	DRHJ	KRER	13.07.01	FI	FIRST ISSUE

Copying of this document, and giving it to the others and the use or communication of the contents there of, are forbidden without express authority by LURGI/PIDEC. Offenders are liable to the payment of damages. All rights are reserved in the event of the grant of a patent or the registration of a utility model or design.

ZAGROS PETROCHEMICAL COMPANY

DISPOSITION:
- NO COMMENT
- COMMENTS AS MARKED. FABRICATION CAN PROCEED ACCORDINGLY. REVISED DOC'T TO BE ISSUED EITHER FOR REVIEW OR AS FINAL CERTIFIED. HOWEVER ZAGROS WILL CHECK THIS REVISED DOCUMENT FOR PROPER INCORPORATION.
- REJECTED DOCUMENT TO BE REISSUED.
- USE FOR INFORMATION ONLY.

SIGNATURE DATE

ZAGROS REVIEW & COMMENTS DOES NOT AB-SOLVE THE VENDOR OF THE RESPONSIBILITY FOR THE CORRECT DESIGN, MANUFACTURING AND OPERATION OF EQUIPMENT.

SCALE: ORIGINAL SIZE: A1

NOMINATION:

BASIC DOCUMENT:

DCC DG DL-NO.
VT 011430

JOB NAME: MEGA METHANOL IRAN

OWNER: NATIONAL PETROCHEMICAL COMPANY
ZAGROS PETROCHEMICAL COMPLEX
شرکت پتروشیمی زاگرس

PROJECT: 4th METHANOL PROJECT

OWNER: CONTRACTOR: DWG. NO. DIG-PR-014 REV. 3

CONTRACTOR: PETROCHEMICAL INDUSTRIES DESIGN & ENGINEERING COMPANY
شرکت طراحی ومهندسی صنایع پتروشیمی

ZPC PROJ.NO. 40404277
PIDEC PROJ.NO. 1175
DWG. NO. REV.

lurgi engineering

METHANOL SYNTHESIS
UNIT 200

PROCESS FLOW DIAGRAM SHEET 202

LURGI JOB NO: 69666-01
LURGIDOCUMENT NO: 02044
REV. 3

EDV-ident-No.: igs7 e:\pipe\6969001PFD\rui d-02044.pid 007 14.04.03 RP IGW60