NOTES:

1- FOR DETAIL OF DELUGE VALVE SKID, REFER TO VENDOR DRAWINGS.

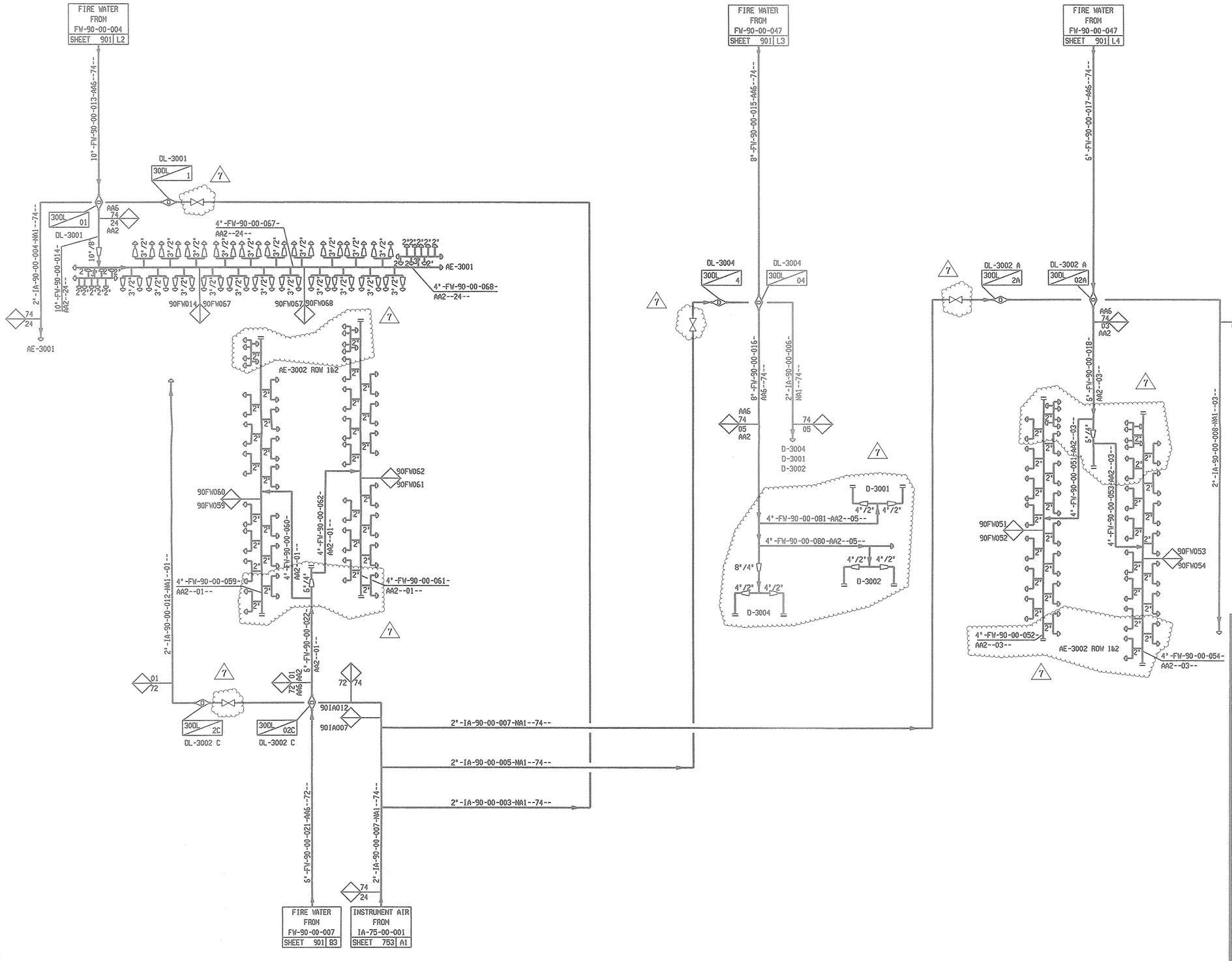

ZPC Doc. Center

As built

Rev.	LF/PS	Name	Date	Name	Name	Date	Status	Kind of Revision
7		R.P	11.09/14	A.R/S.Sh		11.09/14	Asbuilt	REVISED AS MARKED
6		E.G	22.04.06	S.R	A.R	25.04.06	AFC	REVISED AS MARKED
5		E.G	01.03.06			01.03.06	AFC	NO ISSUE
4		E.G	19.08.03	S.R	M.M	20.08.03	AFC	GENERALLY REVISED
3		E.G	26.05.03	S.R	M.M	27.05.03	AFC	AFC (FROZEN)
	Prepared/Changed			Checked	Approved			

Copying of this document, and giving it to others and the use or communication of the contents thereof, are forbidden without express authority by LURGI/PIDEC. Offenders are liable to the payment of damages. All rights are reserved in the event of the grant of a patent or the registration of a utility model or design.

ZAGROS PETROCHEMICAL COMPANY

DISPOSITION

- [ ] NO COMMENT
- [ ] COMMENTS AS MARKED. FABRICATION CAN PROCEED ACCORDINGLY. REVISED DOC'T TO BE ISSUED EITHER FOR REVIEW OR AS FINAL CERTIFIED. HOWEVER ZAGROS WILL CHECK THIS REVISED DOCUMENT FOR PROPER INCORPORATION.
- [ ] REJECTED DOCUMENT TO BE REISSUED.
- [ ] USE FOR INFORMATION ONLY.

SIGNATURE DATE

ZAGROS REVIEW & COMMENTS DOES NOT ABSOLVE THE VENDOR OF THE RESPONSIBILITY FOR THE CORRECT DESIGN, MANUFACTURING AND OPERATION OF EQUIPMENT.

OWNER : NATIONAL PETROCHEMICAL COMPANY
ZAGROS PETROCHEMICAL COMPLEX
شرکت پتروشیمی زاگرس

PROJECT : 4th METHANOL PROJECT

OWNER	CONTRACTOR	DWG. NO.	Rev.
			7

CONTRACTOR : PETROCHEMICAL INDUSTRIES DESIGN & ENGINEERING COMPANY
شرکت طراحی ومهندسی صنایع پتروشیمی

ZPC PROJ. NO. 40404277
PIDEC PROJ. NO. 1175
DWG. NO. P-00-1-PR-203 Rev. 7

Scale: Original Size:

Nomination:

Basic document:

DCC DG. DL-No.
RT

lurgi engineering

FIRE FIGHTING SYSTEM
DELUGE VALVES
UTILITY DISTRIBUTION DIAGRAM
UOD SHEET 902

Job name: MEGA METHANOL IRAN

Lurgi Job No. I6966601 Lurgi Document No. 37902 Rev. 7

d:\pdserv\ke:\pipe\696660l\rul\dwg2_1313 d_37902.pid 001 23.06.03 GHAVANINI POSMKS3