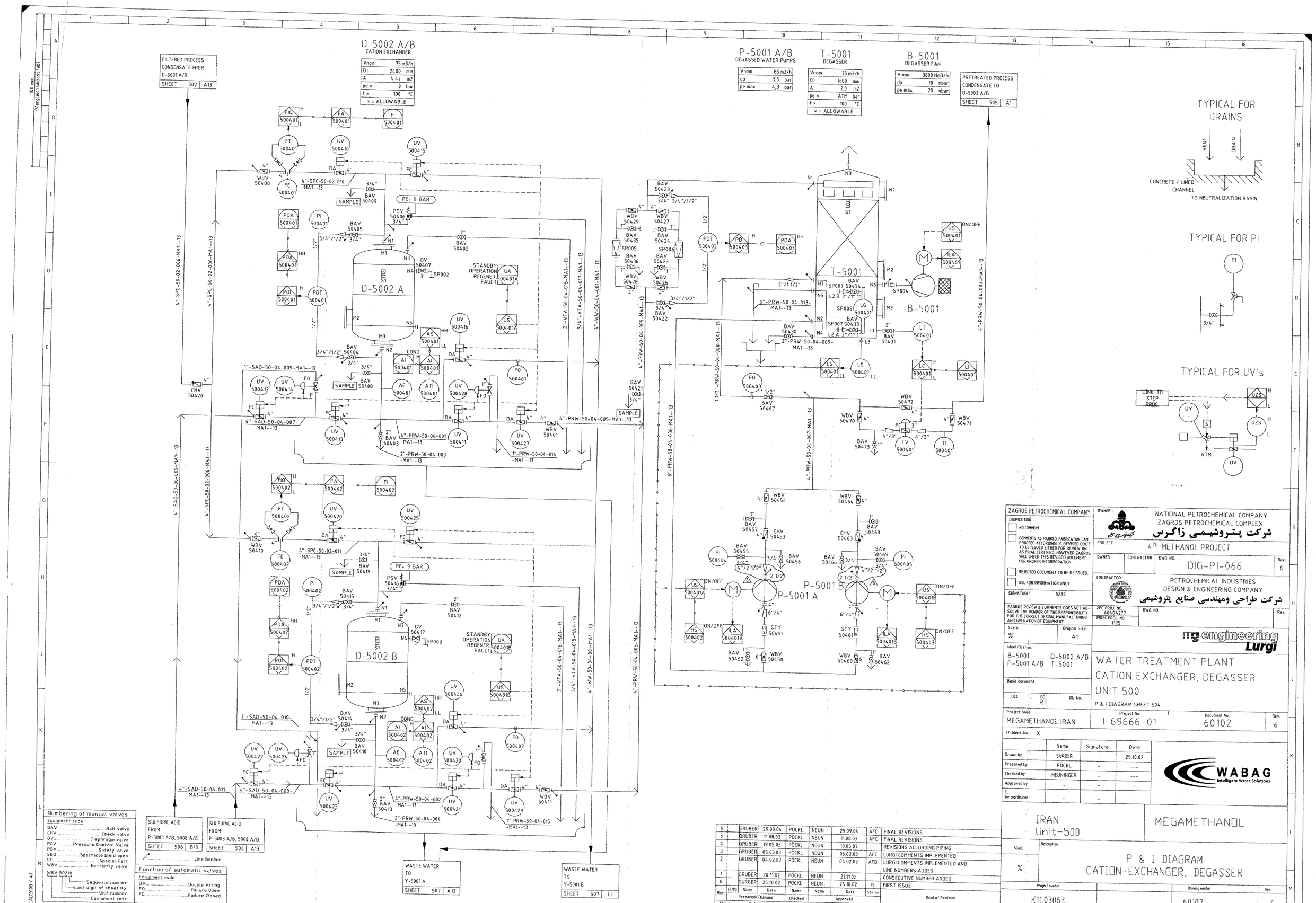
D-5002 A/B
CATION EXCHANGER
Vnom 75 m3/h
D1 2400 mm
A 4,47 m2
pe x 9 bar
t x 100 °C
x = ALLOWABLE
P-5001 A/B
DEGASSED WATER PUMPS
Vnom 85 m3/h
dp 3,5 bar
pe max 4,3 bar
T-5001
DEGASSER
Vnom 75 m3/h
D1 1600 mm
A 2,0 m2
pe x ATM bar
t x 100 °C
x = ALLOWABLE
B-5001
DEGASSER FAN
Vnom 3800 Nm3/h
dp 10 mbar
pe max 20 mbar
FILTERED PROCESS CONDENSATE FROM D-5001 A/B
SHEET 502 A13
PRETREATED PROCESS CONDENSATE TO D-5003 A/B
SHEET 505 A1
D-5002 A
D-5002 B
T-5001
B-5001
P-5001 A
P-5001 B
PE= 9 BAR
SAMPLE
STANDBY OPERATION REGENER. FAULT
WASTE WATER TO Y-5001 A
SHEET 507 A13
WASTE WATER TO Y-5001 B
SHEET 507 L1
SULFURIC ACID FROM P-5003 A/B, 5008 A/B
SHEET 506 B13
SULFURIC ACID FROM P-5003 A/B, 5008 A/B
SHEET 506 A13
Line Border
Numbering of manual valves
Equipment code
BAV ..... Ball valve
CHV ..... Check valve
DV ..... Diaphragm valve
PCV ..... Pressure Control Valve
PSV ..... Safety valve
SBO ..... Spectacle Blind open
SP ..... Special Part
WBV ..... Butterfly valve
WBV 50210
Sequence number
Last digit of sheet No.
Unit number
Equipment code
Function of automatic valves
Equipment code
DA ..... Double Acting
FO ..... Failure Open
FC ..... Failure Closed
TYPICAL FOR DRAINS
VENT
DRAIN
CONCRETE / LINED CHANNEL
TO NEUTRALIZATION BASIN
TYPICAL FOR PI
TYPICAL FOR UV's
LINK TO STEP PROG.
ATM
ZAGROS PETROCHEMICAL COMPANY
DISPOSITION
NO COMMENT
COMMENTS AS MARKED. FABRICATION CAN PROCEED ACCORDINGLY. REVISED DOCT 10 BE ISSUED EITHER FOR REVIEW OR AS FINAL CERTIFIED. HOWEVER ZAGROS WILL CHECK THIS REVISED DOCUMENT FOR PROPER INCORPORATION.
REJECTED DOCUMENT TO BE REISSUED.
USE FOR INFORMATION ONLY.
SIGNATURE DATE
ZAGROS REVIEW & COMMENTS DOES NOT ABSOLVE THE VENDOR OF THE RESPONSIBILITY FOR THE CORRECT DESIGN, MANUFACTURING AND OPERATION OF EQUIPMENT.
OWNER:
NATIONAL PETROCHEMICAL COMPANY
ZAGROS PETROCHEMICAL COMPLEX
شرکت پتروشیمی زاگرس
PROJECT:
4th METHANOL PROJECT
OWNER CONTRACTOR DWG. NO. Rev.
DIG-PI-066 6
CONTRACTOR:
PETROCHEMICAL INDUSTRIES DESIGN & ENGINEERING COMPANY
شرکت طراحی ومهندسی صنایع پتروشیمی
ZPC PROJ. NO. 40404277
PIDEC PROJ. NO. 1175
DWG. NO.
Rev.
Scale: %
Original Size: A1
Identification:
B-5001 D-5002 A/B
P-5001 A/B T-5001
Basic document
DCC DG. R T DL-No.
Project name:
MEGAMETHANOL IRAN
Project No. I 69666-01
Document No. 60102
Rev. 6
IT-Ident-No.: X
engineering Lurgi
WATER TREATMENT PLANT
CATION EXCHANGER, DEGASSER
UNIT 500
P & I DIAGRAM SHEET 504
Name Signature Date
Drawn by SURGER - 25.10.02
Prepared by PÖCKL - ---
Checked by NEUNINGER - ---
Approved by - - -
CL for coordination - - -
WABAG Intelligent Water Solutions
IRAN
Unit-500
MEGAMETHANOL
SCALE %
Description
P & I DIAGRAM
CATION-EXCHANGER, DEGASSER
Project number K11.03063
Drawing number 60102
Rev. 6
Replaced by
Replacement for
Prof. mark DIN 34-1-E
Rev. LF/PS Name Date Name Date Status Kind of Revision
6 GRUBER 29.09.04 PÖCKL NEUN. 29.09.04 AFC FINAL REVISIONS
5 GRUBER 11.08.03 PÖCKL NEUN. 11.08.03 AFC FINAL REVISIONS
4 GRUBER 19.05.03 PÖCKL NEUN. 19.05.03 REVISIONS ACCORDING PIPING
3 GRUBER 05.03.03 PÖCKL NEUN 05.03.03 AFC LURGI COMMENTS IMPLEMENTED
2 GRUBER 04.02.03 PÖCKL NEUN 04.02.03 AFD LURGI COMMENTS IMPLEMENTED AND LINE NUMBERS ADDED
1 GRUBER 20.11.02 PÖCKL NEUN 21.11.02 CONSECUTIVE NUMBER ADDED
0 SURGER 25.10.02 PÖCKL NEUN. 25.10.02 FI FIRST ISSUE
Prepared/Changed Checked Approved
The copying, distribution and utilization of this document as well as the communication of its contents to others without expressed authorization by LURGI/PIDEC is prohibited. Offenders will be held liable for the payment of damages. All rights reserved in the event of the grant of a patent, utility model or ornamental design registration.
ACAD2000 / A1