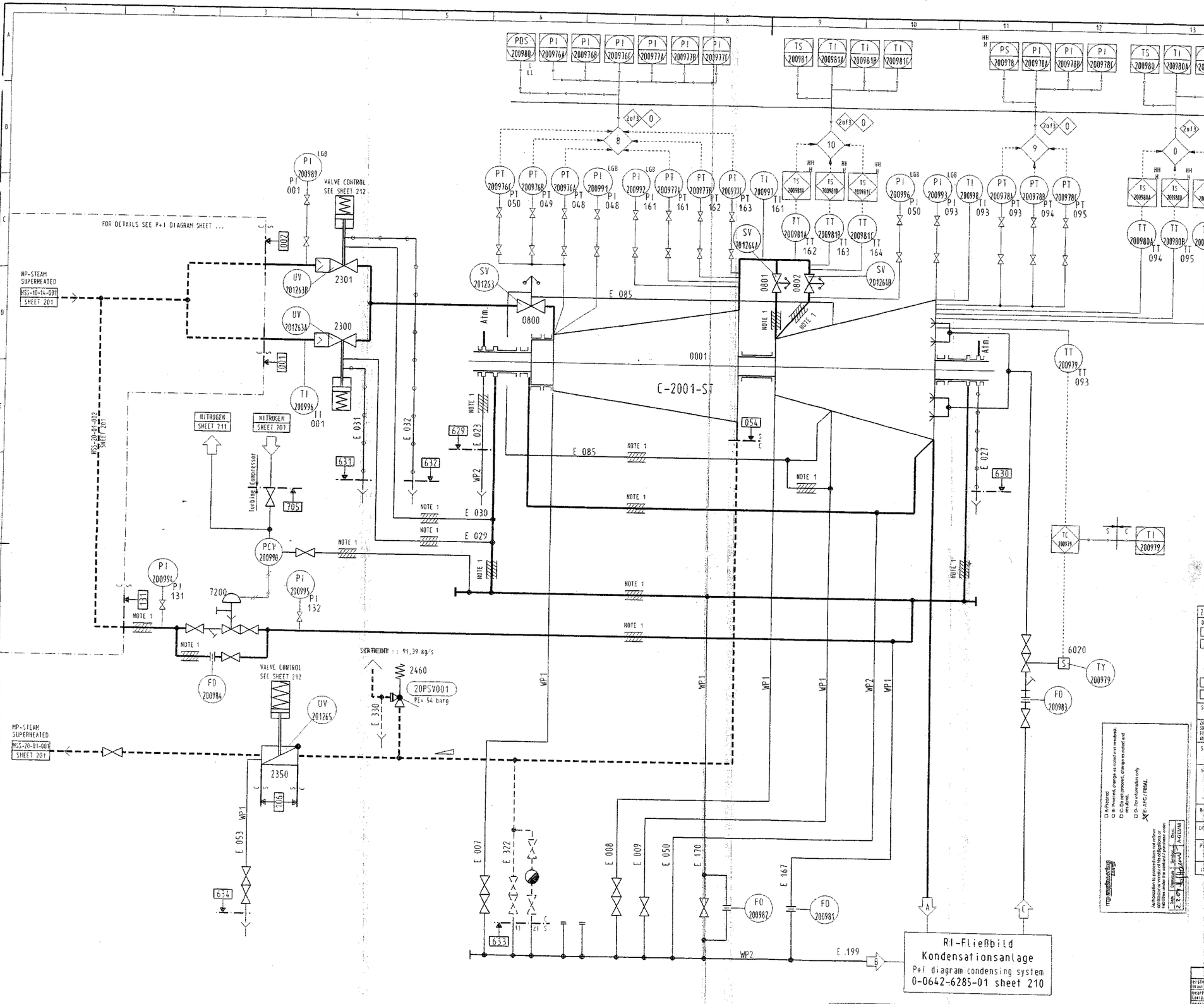

Liefergrenze	Supply interface
Siemens-Lieferung	Siemens supply
Fremdlieferung	supply by others

örtlich	local
Örtl. Instrumentengestell	Local gauge board (Turbine skid mounted)
Örtl. Instrumententafel	Local panel
FCS	FCS by Customer
Reglerschrank	Control cabinet by Siemens

Hierzu gehören:		See also:
Geräteliste	0-2020-6285-00	Bill of material
Endstellenliste	0-0620-6285-00	Table of Terminating connections
Bildzeichen	DIN 2429	Graphical symbols
Rohrleitungen, Armaturen, Fundament	0-0200-0201-00	Piping, Valves, Foundation
Entwässerungen	0-0200-0201-07	Drains
Begrenzungs- und Schutzeinrichtungen	0-0200-0201-08	Limiting and Protective Devices

8 Differential pressure protection

9 Exhaust pressure protection

10 Temperature protection

0 Shut down

Located in control cabinet (PLC) by Siemens

Notes:

1. These lines within the turbine package are insulated by siemens.
2. ---------- Lurgi supply

Index Rev.	Blatt Sheet	Plan-Änderungen Change	Datum Date	Name Name	Geprüft Checked
G		A7-A8 Tag.-No.revised	28.1.04	Hoffmann	Unterloh
F		Instrumentation revised	10.3.03	Hoffmann	Unterloh
E		Insulation added	12.2.03	Hoffmann	Unterloh
D		Drain E330 deleted	13.1.03	Hoffmann	Unterloh
C		Revised acc.to meeting	7.10.02	Hoffmann	Stelzer
B		Revised acc.to meeting	18.7.02	Kotkowski	Stelzer
A		Revised acc.to kick-off meeting dated 27.11.01	7.3.02	Hoffmann	Stelzer

Änderungsbeschreibung / Description of Change

Entstanden aus: Original Nr.
mit Änderung: With Revision
Ersatz für: Substitute for

1) MPC-20-01-004

2) MPC-20-01-003

ZAGROS PETROCHEMICAL COMPANY

DISPOSITION
- NO COMMENT
- COMMENTS AS MARKED. FABRICATION CAN PROCEED ACCORDINGLY. REVISED DOC. TO BE ISSUED EITHER FOR REVIEW OR AS FINAL CERTIFIED. HOWEVER ZAGROS WILL CHECK THIS REVISED DOCUMENT FOR PROPER INCORPORATION.
- REJECTED DOCUMENT TO BE REISSUED.
- USE FOR INFORMATION ONLY.

SIGNATURE DATE

ZAGROS REVIEW & COMMENTS DOES NOT ABSOLVE THE VENDOR OF THE RESPONSIBILITY FOR THE CORRECT DESIGN, MANUFACTURING AND OPERATION OF EQUIPMENT

OWNER: NATIONAL PETROCHEMICAL COMPANY
ZAGROS PETROCHEMICAL COMPLEX
شرکت پتروشیمی زاگرس

PROJECT: 4th METHANOL PROJECT

OWNER | CONTRACTOR | DWG. NO. DIG-RE-001 | Rev 7

CONTRACTOR: PETROCHEMICAL INDUSTRIES DESIGN & ENGINEERING COMPANY
شرکت طراحی ومهندسی صنایع پتروشیمی

ZPC PROJ. NO. 40404277
PIDEC PROJ. NO. 1175

DWG. NO. | Rev

Scale: | Original Size: A1

Identification: C-2001 ST

Basic document:

DOC DG DL-No.

Project name: OMEGA METHANOL IRAN

Project No. 16966601 | Document No. 27057 | Rev. 7

Ident-No.:

mg engineering Lurgi

SYNTHESIS/RECYCLE GAS COMPRESSOR STEAM AND DRAINAGE UNIT 200

P&I DIAGRAM SHEET 209

A Proceed
B Proceed, change as noted and resubmit
C Do not proceed, change as noted and resubmit
D For information only
E ARC / FINAL

Authorisation to proceed does not relieve contractor of responsibility for meeting all requirements of the contract.

Date	Signature	Dist.
28.2.02		A-GEMA

Rev	Datum	Bearb.	Geprüft	Abteilung	Seiten
3	28.1.04	HOFFM	RINGEL	9323	3257
–	26.10.01	HOFFM	RINGEL	9323	3257

SIEMENS

PG: Werk Duisburg

Benennung: RI-Fließbild Dampf+Entwässerung Turbine

Bestell-Nr. 6.0.8.8.8.1.5. | Sprache | Format A1 | Blatt 1 | 1 Bl.

	Datum Date	Name Name
erstellt Drawn	26.10.01	Hoffmann
bearb. Contr.	26.10.01	Hoffmann
geprüft Checked	26.10.01	Stelzer
CAD	Programmerstellung / Zeichnung Unterschriften gedruckt	
Abtrg. Dept.	PG1 331	BG: 44

Siemens AG
Power Generation
Industrial Applications

Maßstab Scale: ###

Specifications: FdV-Norm 0-0000-3510-00

Benennung / Title: RI-Fließbild
Dampf+Entwässerung Turbine
P+I diagram steam and drainage

Format A1 | Sach-Nr./Unterlagen-Nr. Item Number/Document Number: 0-0642-6285-00 | Blatt/Sheet 1- | Index/Revision G

Verteiler MF | 0 3 | N 1 | 0 1 1 | MF

Blattzahl: 1

Projektname : T6285

Zeichnungsname : 0-0642-6285-00

Weitergabe sowie Vervielfältigung dieser Unterlage, Verwertung und Mitteilung ihres Inhaltes nicht gestattet, soweit nicht ausdrücklich zugestanden. Zuwiderhandlungen verpflichten zu Schadensersatz. Alle Rechte für den Fall der Patenterteilung oder GM-Eintragung vorbehalten

Copying of this document, and giving it to others and the use or communication of the contents thereof, are forbidden without express authority. Offenders are liable to the payment of damages. All rights are reserved in the event of the grant of a patent or the registration of a utility model or design.