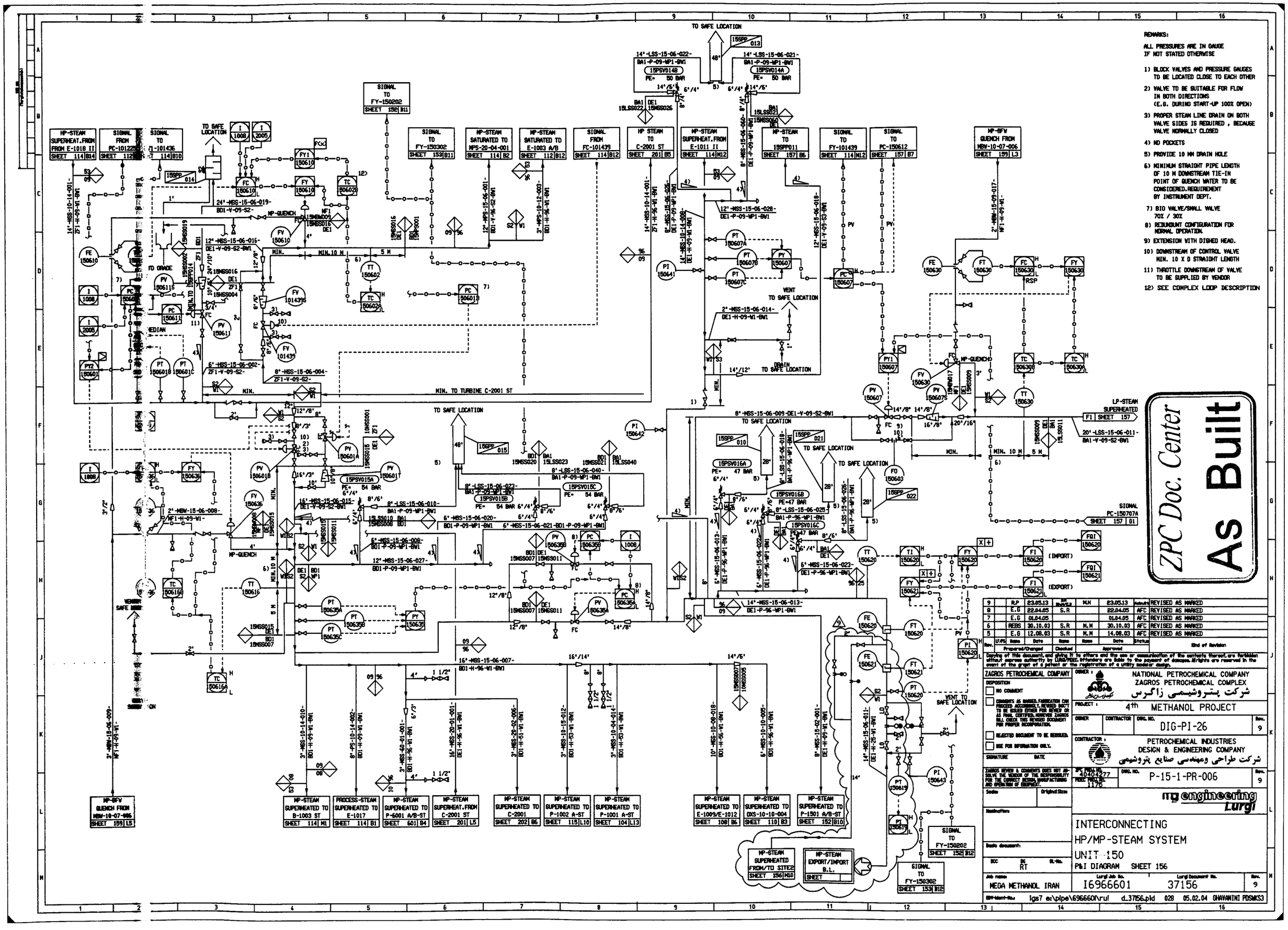
REMARKS:
ALL PRESSURES ARE IN GAUGE IF NOT STATED OTHERWISE
1) BLOCK VALVES AND PRESSURE GAUGES TO BE LOCATED CLOSE TO EACH OTHER
2) VALVE TO BE SUITABLE FOR FLOW IN BOTH DIRECTIONS (E.G. DURING START-UP 100% OPEN)
3) PROPER STEAM LINE DRAIN ON BOTH VALVE SIDES IS REQUIRED , BECAUSE VALVE NORMALLY CLOSED
4) NO POCKETS
5) PROVIDE 10 MM DRAIN HOLE
6) MINIMUM STRAIGHT PIPE LENGTH OF 10 M DOWNSTREAM TIE-IN POINT OF QUENCH WATER TO BE CONSIDERED.REQUIREMENT BY INSTRUMENT DEPT.
7) BIG VALVE/SMALL VALVE 70% / 30%
8) REDUNDUNT CONFIGURATION FOR NORMAL OPERATION.
9) EXTENSION WITH DISHED HEAD.
10) DOWNSTREAM OF CONTROL VALVE MIN. 10 X D STRAIGHT LENGTH
11) THROTTLE DOWNSTREAM OF VALVE TO BE SUPPLIED BY VENDOR
12) SEE COMPLEX LOOP DESCRIPTION
ZPC Doc. Center
As Built
ZAGROS PETROCHEMICAL COMPANY
NATIONAL PETROCHEMICAL COMPANY
ZAGROS PETROCHEMICAL COMPLEX
شرکت پتروشیمی زاگرس
PROJECT : 4th METHANOL PROJECT
DIG-PI-26
CONTRACTOR : PETROCHEMICAL INDUSTRIES DESIGN & ENGINEERING COMPANY
شرکت طراحی ومهندسی صنایع پتروشیمی
P-15-1-PR-006
INTERCONNECTING
HP/MP-STEAM SYSTEM
UNIT 150
P&I DIAGRAM SHEET 156
MEGA METHANOL IRAN
I6966601
37156
REVISED AS MARKED
TO SAFE LOCATION
VENT TO SAFE LOCATION
MP-QUENCH
LP-STEAM SUPERHEATED
SIGNAL TO FY-150202
SIGNAL TO FY-150302
MP-STEAM SUPERHEATED TO B-1003 ST
PROCESS-STEAM SUPERHEATED TO E-1017
MP-STEAM SUPERHEATED TO P-6001 A/B-ST
MP-STEAM SUPERHEAT.FROM C-2001 ST
MP-STEAM SUPERHEATED TO C-2001
MP-STEAM SUPERHEATED TO P-1002 A-ST
MP-STEAM SUPERHEATED TO P-1001 A-ST
MP-STEAM SUPERHEATED TO E-1009/E-1012
MP-STEAM SUPERHEATED TO DXS-10-10-004
MP-STEAM SUPERHEATED TO P-1501 A/B-ST
MP-STEAM SUPERHEATED FROM/TO SITE2
MP-STEAM EXPORT/IMPORT B.L.
MP-BFW QUENCH FROM MBW-10-07-006
MIN. TO TURBINE C-2001 ST