R-1002 A/B/C/D

DESULPHURIZATION REACTOR

Vnom	48.7	m3
od	3200	mm
1TL-TL	5000	mm
pe *	54	bar
t *	420	°C

* = MECH.DESIGN

REMARKS:

ALL PRESSURES ARE IN GAUGE IF NOT STATED OTHERWISE.

1- SPEC BREAK TO BE CLOSE TO TIE-IN TO FLARE HEADER LINE.
2- SAMPLE LINE TAKE-OFF FROM TOP OF PROCESS LINE.
3- VALVE STATION TO BE APPRANGED IN MIN DISTANCE TO REACTOR.
4- GATE VALVE. BLOCK & BLEED.
5- PART OF ANALYZER.
6- MAX. 2 REACTORS ARE IN SERVICE (SERIES OPERATION). NORMAL COMBINATIONS AND DIRECTION OF CHANGE-OVER ARE REACTORS. A-B (AS SHOWN), B-C, D-C, AND D-A
7- BLOW-OUT MIN.3 M ABOVE PLATFORM.
8- FLARE CONNECTION FROM ANALYZER HOUSE 2 (SEE ALSO SHEET 101).

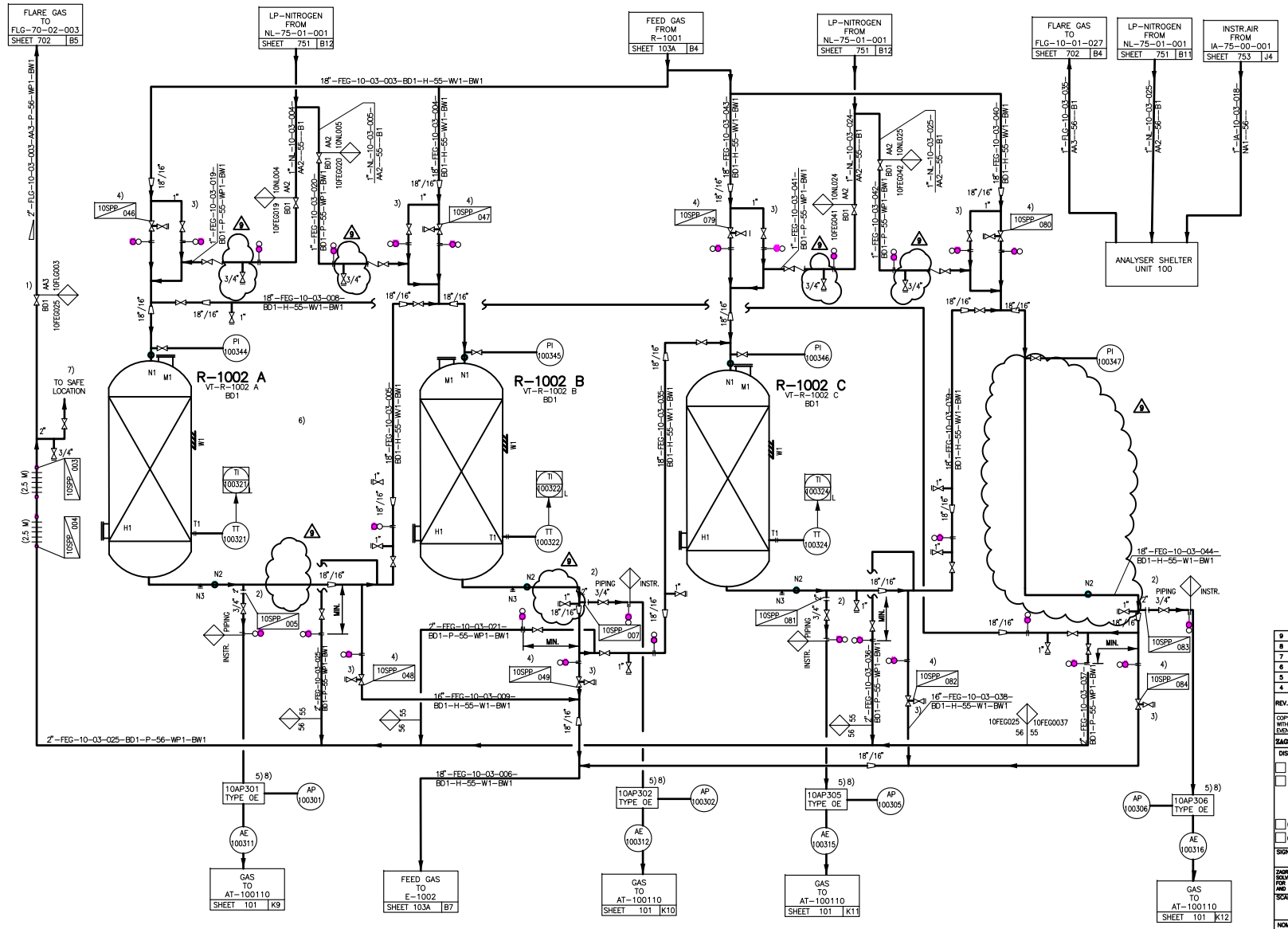

REV.	U/PS	NAME	DATE	NAME	DATE	STATUS	KIND OF REVISION
		PREPARED/CHANGED		CHECKED	APPROVED		
9		E.N	27.07.21	M.N	SH.H 27.07.21	ASBUILT	REVISED AS MARKED
8		KKP	11.10.03	ZMM	PTK 13.10.03	AFC	REVISED AS MARKED
7		KKP	19.07.03	ZMM	PTK 27.07.03	AFC	REVISED AS MARKED (FROZEN)
6		KKP	16.04.03	ZMM	PTK 18.04.03	AFC	ADD.R-1002 C/D (FROZEN)
5		NOA	04.02.03	ZMM	PTK 05.02.03	AFC	REVISED AS MARKED
4		NOA	09.12.02	ZMM	PTK 10.12.02	AFD	AS MARKED

COPYING OF THIS DOCUMENT, AND GIVINGT TO THE OTHERS AND THE USE COMMUNICATION OF THE CONTENTS THEREF, ARE FORBIDDEN WITHOUT EXPRESS AUTHORITY BY LURGI/PIDEC. OFFENDERS ARE LIABLE TO THE PAYMENT OF DAMAGES. ALL RIGHTS ARE RESERVED IN THE EVENT OF THE GRANT OF THE PATENT OR THE RIGISTRATION OF THE UTILITY MODEL OR DESIGN.

ZAGROS PETROCHEMICAL COMPANY

DISPOSITION:
- NO COMMENT
- COMMENTS AS MARKED. FABRICATION CAN PROCEED ACCORDINGLY. REVISED DOCT TO BE ISSUED EITHER FOR REVIEW OR AS FINAL CERTIFIED. HOWEVER ZAGROS WILL CHECK THIS REVISED DOCUMENT FOR PROPER INCORPORATION.
- REJECTED DOCUMENT TO BE REISSUED.
- USE FOR INFORMATION ONLY.

SIGNATURE DATE

ZAGROS REVIEW & COMMENTS DOES NOT ABSOLVE THE VENDOR OF THE RESPONSIBILITY FOR THE CORRECT DESIGN, MANUFACTURING AND OPERATION OF EQUIPMENT.

SCALE: ORIGINAL SIZE:

NOMINATION: E-1002, R-1001, R-1002 A/B

BASIC DOCUMENT:

DCC DG DL-NO. RT

JOB NAME: MEGA METHANOL IRAN

OWNER: NATIONAL PETROCHEMICAL COMPANY ZAGROS PETROCHEMICAL COMPLEX شرکت پتروشیمی زاگرس

PROJECT: 4th METHANOL PROJECT

OWNER: CONTRACTOR: DWG. NO. DIG-PI-074 REV. 9

CONTRACTOR: PETROCHEMICAL INDUSTRIES DESIGN & ENGINEERING COMPANY شرکت طراحی و مهندسی صنایع پتروشیمی

ZPC PROJ.NO. 40404277 PIDEC PROJ.NO. 1125 DWG. NO. REV. 9

engineering Lurgi

REFORMING DESULPHURIZATION UNIT 100

P&I DIAGRAM SHEET 103 B

LURGI JOB NO: 169666-01 LURGI DOCUMENT NO: 37121 REV. 9

IGS7 E:\PIPE\69666001\RUI D-37121.PID 014 26.03.04 KKP PDS61