Pipe Support List

2	29.11.2018	Final Issue	Geng Yun Fei	Bai Yang	Ji Ningbo	
1	08.11.2018	Final Issue	Geng Yun Fei	Bai Yang	Ji Ningbo	
0	14.12.2017	Final Issue	Geng Yun Fei	Bai Yang	Ji Ningbo	
C	07.11.2017	Issued For Review	Geng Yun Fei	Bai Yang	Ji Ningbo	
A	17.07.2017	Issued For Review	Geng Yun Fei	Bai Yang	Ji Ningbo	
REV.	DATE	PURPOSE OF ISSUE	PREPARE	CHECK	REVIEW	APPROVE

Contractor: TCC TIANCHEN CORP.CHINA	PROJECT	MKP Methanol Project			Owner : Middle East Himalaya Pars Co.
	UNIT	Flare	PHASE	Detail Engineering	
	Owner No.	MKP-VD-8500-237-507-A3			
	Contractor No.	MKP-11-DE-9000-FE-REQ-237			
Vendor: 中聖集團 SUNPOWER GROUP LTD.	Vendor No.	17013D85000PE00-13			Rev. : 2 / Page : 2 of 24

REVISION INDEX

REV. / PAGE	A	C	0	1	2	REV. / PAGE	A	C		REV. / PAGE	A	C		
1	X	X												
2	X	X												
3	X	X	X	X	X									
4	X	X	X	X	X									
5	X	X	X	X	X									
6	X	X		X										
7	X	X		X										
8	X	X		X										
9	X	X		X	X									
10	X	X		X										
11	X	X		X	X									
12	X	X		X	X									
13		X		X	X									
14		X		X										
15		X		X										
16		X		X										
17		X		X										
18		X		X										
19		X		X	X									
20		X		X	X									
21		X		X	X									
22		X		X	X									
23		X		X	X									
24			X	X	X									

Item No.	Line No.	SUPPORT NAME	MARK NO.	QTY	El.(mm)		Size(mm)						Remark
					I	II	A	B	C	D	E	F	
85J0101	64"-FLG-85-200-B24-P8	SEAT TYPE SUPPORT[II] (Manufacture by 10mm steel plate)	J10[II];Length=500mm	1	94000		309.2	1430	1180	920			Anchor,Page 24
		ANGLE STEEL L80X80X7		1.8m									
85J0102	64"-FLG-85-200-B24-P8	SEAT TYPE SUPPORT[II] (Manufacture by 10mm steel plate)	J10[II]	1	94000		293.2	1430	1180	920			
85J0103	64"-FLG-85-200-B24-P8	SEAT TYPE SUPPORT[II] (Manufacture by 10mm steel plate)	J10[II]	1	94000		277.2	1430	1180	920			
85J0104	64"-FLG-85-200-B24-P8	SEAT TYPE SUPPORT[II] (Manufacture by 10mm steel plate)	J10[II]	1	94027		234.2	1430	1180	920			Page 19
	64"-FLG-85-200-B24-P8	SPRING	$VS30F_I19$	2	93600		427						
85J0105	64"-FLG-85-200-B24-P8	SEAT TYPE SUPPORT[II] (Manufacture by 10mm steel plate)	J10[II]	1	94058		187.2	1430	1180	920			Page 19
	64"-FLG-85-200-B24-P8	SPRING	$VS60F_I13$	2	93600		458						
85J0201	4"-FLG-85-201-B24-P8	"U" BOLT(Inch)[I]	A1-2(4)[I]	1	95150								Guide,Page 22
		ANGLE STEEL L80X80X7		0.4m	95150								
85J0202	4"-FLG-85-201-B24-P8	"U" BOLT(Inch)[I]	A1-2(4)[I]	1	92450								Guide,Page 22
		ANGLE STEEL L80X80X7		0.4m	92450								
85J0203	4"-FLG-85-201-B24-P8	"T" SHOE SUPPORT (CLAMP)	J2(1a-A5-2)	1	90500		100	200					Page 20
	4"-FLG-85-201-B24-P8	CLAMP(Inch)	A5-2(4)	2									
		ANGLE STEEL L80X80X7		1.5m									
		STEEL PLATE Th=10mm		$0.04m^2$									
		EXPANSION BOLT M12/50		4									
85J0204	4"-FLG-85-201-B24-P8	"T" SHOE SUPPORT (CLAMP)	J2(1a-A5-2)	1	89300		100	200					Page 20
	4"-FLG-85-201-B24-P8	CLAMP(Inch)	A5-2(4)	2									
		ANGLE STEEL L80X80X7		0.3m									
		STEEL PLATE Th=10mm		$0.04m^2$									
		EXPANSION BOLT M12/50		4									
85J0205	4"-FLG-85-201-B24-P8	ELBOW SUPPORT (CLAMP)	G11(A8-2)	1	89950	89200	800						Page 24
	4"-FLG-85-201-B24-P8	3-BOLTS CLAMP(Inch)	A8-2(4)	1									
		EXPANSION BOLT M12/50		4									
85J0206	4"-FLG-85-201-B24-P8	GUIDE SUPPORT	E9	1	90500		1290	200					Guide,Page 21

Item No.	Line No.	SUPPORT NAME	MARK NO.	QTY	El.(mm)		Size(mm)						Remark
					I	II	A	B	C	D	E	F	
	4"-FLG-85-201-B24-P8	"T" SHOE SUPPORT (CLAMP)	J2(1a-A5-2)	1	90500		100	200					
	4"-FLG-85-201-B24-P9	CLAMP(Inch)	A5-2(4)	2									
		STEEL PLATE Th=10mm		0.04m^2									
		EXPANSION BOLT M12/50		4									
85J0301	2"-HPS-85-200-F24-H6	"T" SHOE SUPPORT (WELDING)	J1(1a)	1	93600		100	200					Anchor
85J0302	2"-HPS-85-200-F24-H6	BOTTOM LEG OF ELBOW	F8	1	90000	89200	790		200				Leg Spec. 11/2" sch80
		STEEL PLATE Th=10mm		0.16m^2									Page 20
		EXPANSION BOLT M12/50		4									
85J0303	2"-HPS-85-200-F24-H6	"T" SHOE SUPPORT (CLAMP)	J2(1a-A5-2)	1	89870		100	200					Page 20
	2"-HPS-85-200-F24-H6	CLAMP(Inch)	A5-2(2)	2									
		ANGLE STEEL L80X80X7		0.7m									
		STEEL PLATE Th=10mm		0.04m^2									
		EXPANSION BOLT M12/50		4									
85J0304	2"-HPS-85-200-F24-H6	"T" SHOE SUPPORT (CLAMP)	J2(1a-A5-2)	1	89870		100	200					Page 20
	2"-HPS-85-200-F24-H6	CLAMP(Inch)	A5-2(2)	2									
		ANGLE STEEL L80X80X7		0.7m									
		STEEL PLATE Th=10mm		0.04m^2									
		EXPANSION BOLT M12/50		4									
85J0305	2"-HPS-85-200-F24-H6	"T" SHOE SUPPORT (CLAMP)	J2(1a-A5-2)	1	89757		100	100					Page 20
	2"-HPS-85-200-F24-H6	CLAMP(Inch)	A5-2(3/4)	2									
		ANGLE STEEL L80X80X7		0.6m									
		STEEL PLATE Th=10mm		0.04m^2									
		EXPANSION BOLT M12/50		4									
85J0306	2"-HPS-85-200-F24-H6	"T" SHOE SUPPORT (CLAMP)	J2(1a-A5-2)	1	89870		100	200					Page 20
	2"-HPS-85-200-F24-H6	CLAMP(Inch)	A5-2(2)	2									
		ANGLE STEEL L80X80X7		0.7m									
		STEEL PLATE Th=10mm		0.04m^2									
		EXPANSION BOLT M12/50		4									
85J0401	2"-HPS-85-201-D24-H6	"T" SHOE SUPPORT (CLAMP)	J2(1a-A5-2)	1	89870		100	200					Page 20

Item No.	Line No.	SUPPORT NAME	MARK NO.	QTY	El.(mm)		Size(mm)						Remark
					I	II	A	B	C	D	E	F	
	2"-HPS-85-201-D24-H6	CLAMP(Inch)	A5-2(2)	2									
		ANGLE STEEL L80X80X7		0.7m									
		STEEL PLATE Th=10mm		$0.04m^2$									
		EXPANSION BOLT M12/50		4									
85J0401a	2"-HPS-85-201-D24-H6	GUIDE SUPPORT	E9	1	89870		490	200					Guide,Page 21
	2"-HPS-85-201-D24-H6	"T" SHOE SUPPORT (CLAMP)	J2(1a-A5-2)	1	89870		100	200					
	2"-HPS-85-201-D24-H6	CLAMP(Inch)	A5-2(2)	2									
		STEEL PLATE Th=10mm		$0.04m^2$									
		EXPANSION BOLT M12/50		4									
85J0402	2"-HPS-85-201-D24-H6	"T" SHOE SUPPORT (WELDING)	J1(1a)	1	89870		100	200					Anchor
85J0403	2"-HPS-85-201-D24-H6	"T" SHOE SUPPORT (CLAMP)	J2(1a-A5-2)	1	89870		100	200					Page 20
	2"-HPS-85-201-D24-H6	CLAMP(Inch)	A5-2(2)	2									
		ANGLE STEEL L80X80X7		0.7m									
		STEEL PLATE Th=10mm		$0.04m^2$									
		EXPANSION BOLT M12/50		4									
85J0404	2"-HPS-85-201-D24-H6	BOTTOM LEG OF ELBOW	F8	1	90870	89200	1660		200				Leg Spec. 2" sch40
		STEEL PLATE Th=10mm		$0.16m^2$									Page 20
		EXPANSION BOLT M12/50		4									
85J0405	2"-HPS-85-201-D24-H6	GUIDE SUPPORT	E9	1	93600		350	200					Guide,Page 22
	2"-HPS-85-201-D24-H6	"T" SHOE SUPPORT (CLAMP)	J2(1a-A5-2)	1	93600		100	300					Guide
	2"-HPS-85-201-D24-H6	CLAMP(Inch)	A5-2(3)	2									
85J0406	2"-HPS-85-201-D24-H6	"T" SHOE SUPPORT (CLAMP)	J2(1a-A5-2)	1	89870		100	200					Page 20
	2"-HPS-85-201-D24-H6	CLAMP(Inch)	A5-2(2)	2									
		ANGLE STEEL L80X80X7		2.1m									
		STEEL PLATE Th=10mm		$0.08m^2$									
		EXPANSION BOLT M12/50		8									
85J0407	2"-HPS-85-201-D24-H6	GUIDE SUPPORT [I]	E5 [I]	1	89870		80						Guide,Page 20
	2"-HPS-85-201-D24-H6	"T" SHOE SUPPORT (CLAMP)	J2(1a-A5-2)	1	89870		100	200					
	2"-HPS-85-201-D24-H6	CLAMP(Inch)	A5-2(2)	2									

Item No.	Line No.	SUPPORT NAME	MARK NO.	QTY	El.(mm)		Size(mm)						Remark
					I	II	A	B	C	D	E	F	
		ANGLE STEEL L80X80X7		1.9m									
		STEEL PLATE Th=10mm		$0.08m^2$									
		EXPANSION BOLT M12/50		8									
85J0408	2"-HPS-85-201-D24-H6	"T" SHOE SUPPORT (CLAMP)	J2(1a-A5-2)	1	89870		100	200					Page 20
	2"-HPS-85-201-D24-H6	CLAMP(Inch)	A5-2(2)	2									
		ANGLE STEEL L80X80X7		0.7m									
		STEEL PLATE Th=10mm		$0.04m^2$									
		EXPANSION BOLT M12/50		4									
85J0409	2"-HPS-85-201-D24-H6	"T" SHOE SUPPORT (CLAMP)	J2(1a-A5-2)	1	89870		100	200					Page 20
	2"-HPS-85-201-D24-H6	CLAMP(Inch)	A5-2(2)	2									
85J0410	2"-HPS-85-201-D24-H6	GUIDE SUPPORT [I]	E5 [I]	1	89870		80						Guide,Page 20
	2"-HPS-85-201-D24-H6	"T" SHOE SUPPORT (CLAMP)	J2(1a-A5-2)	1	89870		100	200					
	2"-HPS-85-201-D24-H6	CLAMP(Inch)	A5-2(2)	2									
85J0411	2"-HPS-85-201-D24-H6	"T" SHOE SUPPORT (CLAMP)	J2(1a-A5-2)	1	89870		100	200					Page 20
	2"-HPS-85-201-D24-H6	CLAMP(Inch)	A5-2(2)	2									
85J0412	2"-HPS-85-201-D24-H6	"T" SHOE SUPPORT (CLAMP)	J2(1a-A5-2)	1	89870		100	200					Page 20
	2"-HPS-85-201-D24-H6	CLAMP(Inch)	A5-2(2)	2									
85J0413	2"-HPS-85-201-D24-H6	"T" SHOE SUPPORT (CLAMP)	J2(1a-A5-2)	1	89757		100	100					Page 20
	2"-HPS-85-201-D24-H6	CLAMP(Inch)	A5-2(3/4)	2									
		ANGLE STEEL L80X80X7		0.6m									
		STEEL PLATE Th=10mm		$0.04m^2$									
		EXPANSION BOLT M12/50		4									
85J0414	2"-HPS-85-201-D24-H6	"T" SHOE SUPPORT (CLAMP)	J2(1a-A5-2)	1	89757		100	100					Page 20
	2"-HPS-85-201-D24-H6	CLAMP(Inch)	A5-2(3/4)	2									
		ANGLE STEEL L80X80X7		0.6m									
		STEEL PLATE Th=10mm		$0.04m^2$									
		EXPANSION BOLT M12/50		4									
85J0415	2"-HPS-85-201-D24-H6	"T" SHOE SUPPORT (CLAMP)	J2(1a-A5-2)	1	92800		100	300					Page 21

Item No.	Line No.	SUPPORT NAME	MARK NO.	QTY	El.(mm)		Size(mm)						Remark
					I	II	A	B	C	D	E	F	
	2"-HPS-85-201-D24-H6	CLAMP(Inch)	A5-2(2)	2									
	2"-HPS-85-201-D24-H6	"L" TYPE HANGER	B24	1	HOLD	92800	800	300					
85J0416	2"-HPS-85-201-D24-H6	"T" SHOE SUPPORT (CLAMP)	J2(1a-A5-2)	1	93600		100	300					
	2"-HPS-85-201-D24-H6	CLAMP(Inch)	A5-2(2)										
85J0417	2"-HPS-85-201-D24-H6	"T" SHOE SUPPORT (CLAMP)	J2(1a-A5-2)	1	93600		100	300					
	2"-HPS-85-201-D24-H6	CLAMP(Inch)	A5-2(2)										
85J0418	2"-HPS-85-201-D24-H6	"T" SHOE SUPPORT (CLAMP)	J2(1a-A5-2)	1	96300		100	300					Page 19
	2"-HPS-85-201-D24-H6	CLAMP(Inch)	A5-2(2)										
		ANGLE STEEL L80X80X7		1.2m									
		STEEL PLATE Th=10mm		$0.18m^2$									
85J0501	1"-HPS-85-202-D24-H6	"T" SHOE SUPPORT (CLAMP)	J2(1a-A5-2)	1	89870		113	200					Page 20
		CLAMP(Inch)	A5-2(1)	2									
85J0502	1"-HPS-85-202-D24-H6	"T" SHOE SUPPORT (CLAMP)	J2(1a-A5-2)	1	89883		100	200					Page 20
	1"-HPS-85-202-D24-H6	CLAMP(Inch)	A5-2(1)	2									
		ANGLE STEEL L80X80X7		0.8m									
		STEEL PLATE Th=10mm		$0.04m^2$									
		EXPANSION BOLT M12/50		4									
85J0503	1"-HPS-85-202-D24-H6	"T" SHOE SUPPORT (CLAMP)	J2(1a-A5-2)	1	89883		100	200					Page 20
	1"-HPS-85-202-D24-H6	CLAMP(Inch)	A5-2(1)	2									
		ANGLE STEEL L80X80X7		0.8m									
		STEEL PLATE Th=10mm		$0.04m^2$									
		EXPANSION BOLT M12/50		4									
85J0504	1"-HPS-85-202-D24-H6	"T" SHOE SUPPORT (CLAMP)	J2(1a-A5-2)	1	89883		100	200					Page 20
	1"-HPS-85-202-D24-H6	CLAMP(Inch)	A5-2(1)	2									
		ANGLE STEEL L80X80X7		0.8m									
		STEEL PLATE Th=10mm		$0.04m^2$									
		EXPANSION BOLT M12/50		4									
85J0505	1"-HPS-85-202-D24-H6	"T" SHOE SUPPORT (CLAMP)	J2(1a-A5-2)	1	89883		100	200					Page 20

Item No.	Line No.	SUPPORT NAME	MARK NO.	QTY	El.(mm)		Size(mm)						Remark
					I	II	A	B	C	D	E	F	
	1"-HPS-85-202-D24-H6	CLAMP(Inch)	A5-2(1)	2									
		ANGLE STEEL L80X80X7		0.8m									
		STEEL PLATE Th=10mm		$0.04m^2$									
		EXPANSION BOLT M12/50		4									
85J0506	1"-HPS-85-202-D24-H6	"T" SHOE SUPPORT (CLAMP)	J2(1a-A5-2)	1	89883		100	200					Page 20
	1"-HPS-85-202-D24-H6	CLAMP(Inch)	A5-2(1)	2									
		ANGLE STEEL L80X80X7		0.8m									
		STEEL PLATE Th=10mm		$0.04m^2$									
		EXPANSION BOLT M12/50		4									
85J0507	1"-HPS-85-202-D24-H6	GUIDE SUPPORT	E9	1	91000	91000	453	200					Guide,Page 22
	1"-HPS-85-202-D24-H6	"T" SHOE SUPPORT (CLAMP)	J2(1a-A5-2)	1	91000		100	200					Guide
	1"-HPS-85-202-D24-H6	CLAMP(Inch)	A5-2(1)	2									
		STEEL PLATE Th=10mm		$0.08m^2$									
85J0601	1"-HPC-85-200-D24-H6	GUIDE SUPPORT	E9	1	91000	91000	453	200					Guide,Page 22
	1"-HPC-85-200-D24-H6	"T" SHOE SUPPORT (CLAMP)	J2(1a-A5-2)	1	91000		100	200					Guide
	1"-HPC-85-200-D24-H6	CLAMP(Inch)	A5-2(1)	2									
		STEEL PLATE Th=10mm		$0.08m^2$									
85J0602	1"-HPC-85-200-D24-H6	"T" SHOE SUPPORT (CLAMP)	J2(1a-A5-2)	1	89383		100	100					Page 20
	1"-HPC-85-200-D24-H6	CLAMP(Inch)	A5-2(1)	2									
		ANGLE STEEL L80X80X7		0.6m									
		STEEL PLATE Th=10mm		$0.04m^2$									
		EXPANSION BOLT M12/50		4									
85J0701	2"-IA-85-200-B50-N	"T" SHOE SUPPORT (CLAMP)	J2(1a-A5-2)	1	93600		100	300					
	2"-IA-85-200-B50-N	CLAMP(Inch)	A5-2(2)	2									
85J0702	2"-IA-85-200-B50-N	"T" SHOE SUPPORT (CLAMP)	J2(1a-A5-2)	1	93600		100	300					
	2"-IA-85-200-B50-N	CLAMP(Inch)	A5-2(2)	2									
85J0703	2"-IA-85-200-B50-N	"T" SHOE SUPPORT (CLAMP)	J2(1a-A5-2)	1	93600		100	300					
	2"-IA-85-200-B50-N	CLAMP(Inch)	A5-2(2)	2									

Item No.	Line No.	SUPPORT NAME	MARK NO.	QTY	El.(mm)		Size(mm)						Remark
					I	II	A	B	C	D	E	F	
85J0704	2"-IA-85-200-B50-N	"T" SHOE SUPPORT (CLAMP)	J2(1a-A5-2)	1	89650		100	200					Page 20
	2"-IA-85-200-B50-N	CLAMP(Inch)	A5-2(2)	2									
		ANGLE STEEL L80X80X7		0.7m									
		STEEL PLATE Th=10mm		$0.04m^2$									
		EXPANSION BOLT M12/50		4									
85J0705	2"-IA-85-200-B50-N	"T" SHOE SUPPORT (CLAMP)	J2(1a-A5-2)	1	89650		100	200					Page 20
	2"-IA-85-200-B50-N	CLAMP(Inch)	A5-2(2)	2									
		ANGLE STEEL L80X80X7		0.7m									
		STEEL PLATE Th=10mm		$0.04m^2$									
		EXPANSION BOLT M12/50		4									
85J0801	1"-IA-85-202-B40-N	"U" BOLT(Inch)[II]	A1-2(1)[II]	1									Anchor
85J0802	1"-IA-85-202-B40-N	"U" BOLT(Inch)[I]	A1-2(1)[I]	1									Guide
85J0901	4"-NG-85-200-B24-N	GUIDE OF HORIZONTAL PIPE	E1	1	93600		100						Guide
85J0902	4"-NG-85-200-B24-N	"U" BOLT(Inch)[I]	A1-2(4)[I]	1									Guide,Page 21
		"Ц" TYPE HANGER[I]	B14[I]	1	HOLD	92800	800		600				
85J1001	3"-NG-85-201-B24-N	"U" BOLT(Inch)[I]	A1-2(3)[I]	1									Guide,Page 20
		ANGLE STEEL L80X80X7		0.8m									
		STEEL PLATE Th=10mm		$0.04m^2$									
		EXPANSION BOLT M12/50		4									
85J1101	1"-NG-85-202-B24-N	"U" BOLT(Inch)[I]	A1-2(1)[I]	1									Guide
		ANGLE STEEL L80X80X7		0.7m									
		STEEL PLATE Th=10mm		$0.04m^2$									
		EXPANSION BOLT M12/50		4									
85J1102	1"-NG-85-202-B24-N	"U" BOLT(Inch)[I]	A1-2(1)[I]	1									Guide,Page 20
		ANGLE STEEL L80X80X7		0.7m									
		STEEL PLATE Th=10mm		$0.04m^2$									
		EXPANSION BOLT M12/50		4									

Item No.	Line No.	SUPPORT NAME	MARK NO.	QTY	El.(mm)		Size(mm)						Remark
					I	II	A	B	C	D	E	F	
85J1103	1"-NG-85-202-B24-N	"U" BOLT(Inch)[I]	A1-2(1)[I]	1									Guide,Page 21
		"L" TYPE HANGER	B24	1	HOLD	92800	800	100					
85J1104	1"-NG-85-202-B24-N	"U" BOLT(Inch)[I]	A1-2(1)[I]	1									Guide
85J1105	1"-NG-85-202-B24-N	"U" BOLT(Inch)[I]	A1-2(1)[I]	1									Guide
85J1106	1"-NG-85-202-B24-N	"U" BOLT(Inch)[I]	A1-2(1)[I]	1									Guide
85J1201	2"-NG-85-203-B24-N	"U" BOLT(Inch)[I]	A1-2(2)[I]	1									Guide,Page 20
		ANGLE STEEL L80X80X7		0.7m									
		STEEL PLATE Th=10mm		$0.04m^2$									
		EXPANSION BOLT M12/50		4									
85J1202	2"-NG-85-203-B24-N	"U" BOLT(Inch)[I]	A1-2(2)[I]	1									Guide,Page 20
		ANGLE STEEL L80X80X7		0.7m									
		STEEL PLATE Th=10mm		$0.04m^2$									
		EXPANSION BOLT M12/50		4									
85J1203	2"-NG-85-203-B24-N	"U" BOLT(Inch)[I]	A1-2(2)[I]	1									Guide
85J1204	2"-NG-85-203-B24-N	"U" BOLT(Inch)[I]	A1-2(2)[I]	1									Guide
85J1205	2"-NG-85-203-B24-N	"U" BOLT(Inch)[I]	A1-2(2)[I]	1									Guide
85J1206	2"-NG-85-203-B24-N	"U" BOLT(Inch)[I]	A1-2(2)[I]	1									Guide,Page 19
85J1301	2"-NG-85-204-B24-N	"U" BOLT(Inch)[I]	A1-2(2)[I]	1									Guide,Page 21
85J1302	2"-NG-85-204-B24-N	"U" BOLT(Inch)[I]	A1-2(2)[I]	1									Guide
85J1303	2"-NG-85-204-B24-N	"U" BOLT(Inch)[I]	A1-2(2)[I]	1									Guide
85J1304	2"-NG-85-204-B24-N	"U" BOLT(Inch)[I]	A1-2(2)[I]	1									Guide
85J1305	2"-NG-85-204-B24-N	"U" BOLT(Inch)[I]	A1-2(2)[I]	1									Guide

Item No.	Line No.	SUPPORT NAME	MARK NO.	QTY	El.(mm)		Size(mm)						Remark
					I	II	A	B	C	D	E	F	
85J1401	1"-NG-85-205-B50-N	"T" SHOE SUPPORT (CLAMP)	J2(1a-A5-2)	1	89650		100	200					Page 20
	1"-NG-85-205-B50-N	CLAMP(Inch)	A5-2(1)	2									
		ANGLE STEEL L80X80X7		0.7m									
		STEEL PLATE Th=10mm		$0.04m^2$									
		EXPANSION BOLT M12/50		4									
85J1402	1"-NG-85-205-B50-N	"T" SHOE SUPPORT (CLAMP)	J2(1a-A5-2)	1	89650		100	200					Page 20
	1"-NG-85-205-B50-N	CLAMP(Inch)	A5-2(1)	2									
		ANGLE STEEL L80X80X7		0.7m									
		STEEL PLATE Th=10mm		$0.04m^2$									
		EXPANSION BOLT M12/50		4									
85J1501	1"-NG-85-206-B50-N	"U" BOLT(Inch)[I]	A1-2(1)[I]	1									Guide,Page 21
		"Ц" TYPE HANGER[I]	B14[I]	1	HOLD	92800	800		800				
85J1502	1"-NG-85-206-B50-N	"U" BOLT(Inch)[I]	A1-2(1)[I]	1									Guide
85J1503	1"-NG-85-206-B50-N	"U" BOLT(Inch)[I]	A1-2(1)[I]	1									Guide
85J1601	1"-NG-85-207-B50-N	"U" BOLT(Inch)[I]	A1-2(1)[I]	1									Guide,Page 21
85J1602	1"-NG-85-207-B50-N	"U" BOLT(Inch)[I]	A1-2(1)[I]	1									Guide
85J1603	1"-NG-85-207-B50-N	"U" BOLT(Inch)[I]	A1-2(1)[I]	1									Guide
85J1701	1"-NG-85-208-B50-N	"U" BOLT(Inch)[I]	A1-2(1)[I]	1									Guide,Page 21
85J1702	1"-NG-85-208-B50-N	"U" BOLT(Inch)[I]	A1-2(1)[I]	1									Guide
85J1703	1"-NG-85-208-B50-N	"U" BOLT(Inch)[I]	A1-2(1)[I]	1									Guide
85J1801	1"-NG-85-209-B50-N	"U" BOLT(Inch)[I]	A1-2(1)[I]	1									Guide,Page 21
85J1802	1"-NG-85-209-B50-N	"U" BOLT(Inch)[I]	A1-2(1)[I]	1									Guide

Item No.	Line No.	SUPPORT NAME	MARK NO.	QTY	El.(mm)		Size(mm)						Remark
					I	II	A	B	C	D	E	F	
85J1803	1"-NG-85-209-B50-N	"U" BOLT(Inch)[I]	A1-2(1)[I]	1									Guide
85J1901	1"-NG-85-210-B40-N	"U" BOLT(Inch)[II]	A1-2(1)[II]	1									Anchor
85J1902	1"-NG-85-210-B40-N	"U" BOLT(Inch)[II]	A1-2(1)[II]	1									Anchor
85J1903	1"-NG-85-210-B40-N	"U" BOLT(Inch)[II]	A1-2(1)[II]	1									Anchor
85J1904	1"-NG-85-210-B40-N	"U" BOLT(Inch)[II]	A1-2(1)[II]	1									Anchor
85J2001	1"-NG-85-211-B50-N	"U" BOLT(Inch)[I]	A1-2(1)[I]	1									Guide,Page 21
		TRIANGLE BRACKET[II]	D15[II]	1	92800		800	1004					
85J2002	1"-NG-85-211-B50-N	"U" BOLT(Inch)[I]	A1-2(1)[I]	1									Guide
85J2101	1"-NG-85-212-B50-N	"U" BOLT(Inch)[I]	A1-2(1)[I]	1									Guide,Page 21
85J2102	1"-NG-85-212-B50-N	"U" BOLT(Inch)[I]	A1-2(1)[I]	1									Guide
85J2201	1"-NG-85-213-B50-N	"U" BOLT(Inch)[I]	A1-2(1)[I]	1									Guide,Page 21
85J2202	1"-NG-85-213-B50-N	"U" BOLT(Inch)[I]	A1-2(1)[I]	1									Guide
85J2301	1"-NG-85-214-B50-N	"U" BOLT(Inch)[I]	A1-2(1)[I]	1									Guide,Page 21
85J2302	1"-NG-85-214-B50-N	"U" BOLT(Inch)[I]	A1-2(1)[I]	1									Guide
85J2401	1"-NG-85-215-B40-N	"U" BOLT(Inch)[II]	A1-2(1)[II]	1									Anchor
85J2402	1"-NG-85-215-B40-N	"U" BOLT(Inch)[I]	A1-2(1)[I]	1									Guide
85J2403	1"-NG-85-215-B40-N	"U" BOLT(Inch)[I]	A1-2(1)[I]	1									Guide
85J2501	2"-NG-85-301-B50-N	"T" SHOE SUPPORT (CLAMP)	J2(1a-A5-2)	1	89636		100	100					Page 20
	2"-NG-85-301-B50-N	CLAMP(Inch)	A5-2(2)	2									
		ANGLE STEEL L80X80X7		0.7m									

Item No.	Line No.	SUPPORT NAME	MARK NO.	QTY	El.(mm)		Size(mm)						Remark
					I	II	A	B	C	D	E	F	
		STEEL PLATE Th=10mm		$0.04m^2$									
		EXPANSION BOLT M12/50		4									
85J2502	2"-NG-85-301-B50-N	"T" SHOE SUPPORT (CLAMP)	J2(1a-A5-2)	1	89636		100	100					Page 20
	2"-NG-85-301-B50-N	CLAMP(Inch)	A5-2(2)	2									
		ANGLE STEEL L80X80X7		0.7m									
		STEEL PLATE Th=10mm		$0.04m^2$									
		EXPANSION BOLT M12/50		4									
85J2503	2"-NG-85-301-B50-N	"T" SHOE SUPPORT (CLAMP)	J2(1a-A5-2)	1	89636		100	100					Page 20
	2"-NG-85-301-B50-N	CLAMP(Inch)	A5-2(2)	2									
		ANGLE STEEL L80X80X7		0.7m									
		STEEL PLATE Th=10mm		$0.04m^2$									
		EXPANSION BOLT M12/50		4									
85J2504	2"-NG-85-301-B50-N	"T" SHOE SUPPORT (CLAMP)	J2(1a-A5-2)	1	89636		100	100					Page 20
	2"-NG-85-301-B50-N	CLAMP(Inch)	A5-2(2)	2									
		ANGLE STEEL L80X80X7		0.7m									
		STEEL PLATE Th=10mm		$0.04m^2$									
		EXPANSION BOLT M12/50		4									
85J2505	2"-NG-85-301-B50-N	"T" SHOE SUPPORT (CLAMP)	J2(1a-A5-2)	1	89636		100	100					Page 20
	2"-NG-85-301-B50-N	CLAMP(Inch)	A5-2(2)	2									
		ANGLE STEEL L80X80X7		0.7m									
		STEEL PLATE Th=10mm		$0.04m^2$									
		EXPANSION BOLT M12/50		4									
85J2601	1"-NG-85-206/207/208/209-B50-N	"U" BOLT(Inch)[I]	A1-2(1)[I]	4									Guide,Page 22
	1"-NG-85-211/212/213/214-B50-N	"U" BOLT(Inch)[I]	A1-2(1)[I]	4									Guide
	1"-NG-85-202-B24-N	"U" BOLT(Inch)[I]	A1-2(1)[I]	1									Guide
		FLAT STEEL Width=100mm Th=10mm		0.8m									
85J2602	1"-NG-85-206/207/208/209-B50-N	"U" BOLT(Inch)[II]	A1-2(1)[II]	4	98000								Anchor,Page 23
	1"-NG-85-211/212/213/214-B50-N	"U" BOLT(Inch)[II]	A1-2(1)[II]	4	98000								Anchor
	1"-NG-85-202-B24-N	"U" BOLT(Inch)[II]	A1-2(1)[II]	1									Anchor
	4"-FLG-85-201-B24-P8	"U" BOLT(Inch)[I]	A1-2(4)[I]	1	98000								Guide

Item No.	Line No.	SUPPORT NAME	MARK NO.	QTY	El.(mm)		Size(mm)						Remark
					I	II	A	B	C	D	E	F	
	2"-HPS-85-201-D24-H6	GUIDE SUPPORT [II]	E5 [II]	1	98000		80						Guide
	2"-HPS-85-201-D24-H6	"T" SHOE SUPPORT (CLAMP)	J2(1a-A5-2)	1	98000		100	300					Guide
	2"-HPS-85-201-D24-H6	CLAMP(Inch)	A5-2(2)	2									
	2"-NG-85-203-B24-N	"U" BOLT(Inch)[II]	A1-2(2)[II]	1	98000								Anchor
		ANGLE STEEL L80X80X7		3.5	98000								
85J2603	1"-NG-85-206/207/208/209-B50-N	"U" BOLT(Inch)[I]	A1-2(1)[I]	4	101000								Guide,Page 23
	1"-NG-85-211/212/213/214-B50-N	"U" BOLT(Inch)[I]	A1-2(1)[I]	4	101000								Guide
	1"-NG-85-202-B24-N	"U" BOLT(Inch)[I]	A1-2(1)[I]	1									Guide
	4"-FLG-85-201-B24-P8	"U" BOLT(Inch)[I]	A1-2(4)[I]	1	101000								Guide
	2"-HPS-85-201-D24-H6	GUIDE SUPPORT [II]	E5 [II]	1	101000		80						Guide
	2"-HPS-85-201-D24-H6	"T" SHOE SUPPORT (CLAMP)	J2(1a-A5-2)	1	101000		100	300					Guide
	2"-HPS-85-201-D24-H6	CLAMP(Inch)	A5-2(2)	2									
	2"-NG-85-203-B24-N	"U" BOLT(Inch)[I]	A1-2(2)[I]	1	101000								Guide
		ANGLE STEEL L80X80X7		3.5m	101000								
85J2604	1"-NG-85-206/207/208/209-B50-N	"U" BOLT(Inch)[I]	A1-2(1)[I]	4	104750								Guide,Page 23
	1"-NG-85-211/212/213/214-B50-N	"U" BOLT(Inch)[I]	A1-2(1)[I]	4	104750								Guide
	1"-NG-85-202-B24-N	"U" BOLT(Inch)[I]	A1-2(1)[I]	1									Guide
	4"-FLG-85-201-B24-P8	"U" BOLT(Inch)[I]	A1-2(4)[I]	1	104750								Guide
	2"-HPS-85-201-D24-H6	GUIDE SUPPORT [II]	E5 [II]	1	104750		80						Guide
	2"-HPS-85-201-D24-H6	"T" SHOE SUPPORT (CLAMP)	J2(1a-A5-2)	1	104750		100	300					Guide
	2"-HPS-85-201-D24-H6	CLAMP(Inch)	A5-2(2)	2									
		ANGLE STEEL L80X80X7		3.5m	104750								
85J2605	1"-NG-85-206/207/208/209-B50-N	"U" BOLT(Inch)[I]	A1-2(1)[I]	4	107750								Guide,Page 23
	1"-NG-85-211/212/213/214-B50-N	"U" BOLT(Inch)[I]	A1-2(1)[I]	4	107750								Guide
	1"-NG-85-202-B24-N	"U" BOLT(Inch)[I]	A1-2(1)[I]	1									Guide
	4"-FLG-85-201-B24-P8	"U" BOLT(Inch)[II]	A1-2(4)[II]	1	107750								Anchor
	2"-HPS-85-201-D24-H6	"T" SHOE SUPPORT (WELDING)	J1(1a)	1	107750		100	300					Anchor
		ANGLE STEEL L80X80X7		3.5m	107750								
85J2606	1"-NG-85-206/207/208/209-B50-N	"U" BOLT(Inch)[I]	A1-2(1)[I]	4	110750								Guide,Page 23
	1"-NG-85-211/212/213/214-B50-N	"U" BOLT(Inch)[I]	A1-2(1)[I]	4	110750								Guide
	1"-NG-85-202-B24-N	"U" BOLT(Inch)[I]	A1-2(1)[I]	1									Guide
	4"-FLG-85-201-B24-P8	"U" BOLT(Inch)[I]	A1-2(4)[I]	1	110750								Guide

Item No.	Line No.	SUPPORT NAME	MARK NO.	QTY	El.(mm)		Size(mm)						Remark
					I	II	A	B	C	D	E	F	
	2"-HPS-85-201-D24-H6	GUIDE SUPPORT [II]	E5 [II]	1	110750		80						Guide
	2"-HPS-85-201-D24-H6	"T" SHOE SUPPORT (CLAMP)	J2(1a-A5-2)	1	110750		100	300					Guide
	2"-HPS-85-201-D24-H6	CLAMP(Inch)	A5-2(2)	2									
		ANGLE STEEL L80X80X7		3.5m	110750								
85J2607	1"-NG-85-206/207/208/209-B50-N	"U" BOLT(Inch)[I]	A1-2(1)[I]	4	113750								Guide,Page 23
	1"-NG-85-211/212/213/214-B50-N	"U" BOLT(Inch)[I]	A1-2(1)[I]	4	113750								Guide
	1"-NG-85-202-B24-N	"U" BOLT(Inch)[I]	A1-2(1)[I]	1									Guide
	4"-FLG-85-201-B24-P8	"U" BOLT(Inch)[I]	A1-2(4)[I]	1	113750								Guide
	2"-HPS-85-201-D24-H6	GUIDE SUPPORT [II]	E5 [II]	1	113750		80						Guide
	2"-HPS-85-201-D24-H6	"T" SHOE SUPPORT (CLAMP)	J2(1a-A5-2)	1	113750		100	300					Guide
	2"-HPS-85-201-D24-H6	CLAMP(Inch)	A5-2(2)	2									
		ANGLE STEEL L80X80X7		3.5m	113750								
85J2608	1"-NG-85-206/207/208/209-B50-N	"U" BOLT(Inch)[I]	A1-2(1)[I]	4	116750								Guide,Page 23
	1"-NG-85-211/212/213/214-B50-N	"U" BOLT(Inch)[I]	A1-2(1)[I]	4	116750								Guide
	1"-NG-85-202-B24-N	"U" BOLT(Inch)[I]	A1-2(1)[I]	1									Guide
	4"-FLG-85-201-B24-P8	"U" BOLT(Inch)[I]	A1-2(4)[I]	1	116750								Guide
	2"-HPS-85-201-D24-H6	GUIDE SUPPORT [II]	E5 [II]	1	116750		80						Guide
	2"-HPS-85-201-D24-H6	"T" SHOE SUPPORT (CLAMP)	J2(1a-A5-2)	1	116750		100	300					Guide
	2"-HPS-85-201-D24-H6	CLAMP(Inch)	A5-2(2)	2									
		ANGLE STEEL L80X80X7		3.5m	116750								
85J2609	1"-NG-85-206/207/208/209-B50-N	"U" BOLT(Inch)[I]	A1-2(1)[I]	4	119750								Guide,Page 23
	1"-NG-85-211/212/213/214-B50-N	"U" BOLT(Inch)[I]	A1-2(1)[I]	4	119750								Guide
	1"-NG-85-202-B24-N	"U" BOLT(Inch)[I]	A1-2(1)[I]	1									Guide
	4"-FLG-85-201-B24-P8	"U" BOLT(Inch)[I]	A1-2(4)[I]	1	119750								Guide
	2"-HPS-85-201-D24-H6	GUIDE SUPPORT [II]	E5 [II]	1	119750		80						Guide
	2"-HPS-85-201-D24-H6	"T" SHOE SUPPORT (CLAMP)	J2(1a-A5-2)	1	119750		100	300					Guide
	2"-HPS-85-201-D24-H6	CLAMP(Inch)	A5-2(2)	2									
		ANGLE STEEL L80X80X7		3.5m	119750								
85J2610	1"-NG-85-206/207/208/209-B50-N	"U" BOLT(Inch)[I]	A1-2(1)[I]	4	122750								Guide,Page 23
	1"-NG-85-211/212/213/214-B50-N	"U" BOLT(Inch)[I]	A1-2(1)[I]	4	122750								Guide
	1"-NG-85-202-B24-N	"U" BOLT(Inch)[I]	A1-2(1)[I]	1									Guide
	4"-FLG-85-201-B24-P8	"U" BOLT(Inch)[II]	A1-2(4)[II]	1	122750								Anchor

Item No.	Line No.	SUPPORT NAME	MARK NO.	QTY	El.(mm)		Size(mm)						Remark
					I	II	A	B	C	D	E	F	
	2"-HPS-85-201-D24-H6	"T" SHOE SUPPORT (WELDING)	J1(1a)	1	122750		100	300					Anchor
		ANGLE STEEL L80X80X7		3.5m	122750								
85J2611	1"-NG-85-206/207/208/209-B50-N	"U" BOLT(Inch)[II]	A1-2(1)[II]	4	125750								Anchor,Page 23
	1"-NG-85-211/212/213/214-B50-N	"U" BOLT(Inch)[II]	A1-2(1)[II]	4	125750								Anchor
	1"-NG-85-202-B24-N	"U" BOLT(Inch)[II]	A1-2(1)[II]	1									Anchor
	4"-FLG-85-201-B24-P8	"U" BOLT(Inch)[I]	A1-2(4)[I]	1	125750								Guide
	2"-HPS-85-201-D24-H6	GUIDE SUPPORT [II]	E5 [II]	1	125750		80						Guide
	2"-HPS-85-201-D24-H6	"T" SHOE SUPPORT (CLAMP)	J2(1a-A5-2)	1	125750		100	300					Guide
	2"-HPS-85-201-D24-H6	CLAMP(Inch)	A5-2(2)	2									
		ANGLE STEEL L80X80X7		3.5m	125750								
85J2612	1"-NG-85-206/207/208/209-B50-N	"U" BOLT(Inch)[I]	A1-2(1)[I]	4	128750								Guide,Page 23
	1"-NG-85-211/212/213/214-B50-N	"U" BOLT(Inch)[I]	A1-2(1)[I]	4	128750								Guide
	1"-NG-85-202-B24-N	"U" BOLT(Inch)[I]	A1-2(1)[I]	1									Guide
	4"-FLG-85-201-B24-P8	"U" BOLT(Inch)[I]	A1-2(4)[I]	1	128750								Guide
	2"-HPS-85-201-D24-H6	GUIDE SUPPORT [II]	E5 [II]	1	128750		80						Guide
	2"-HPS-85-201-D24-H6	"T" SHOE SUPPORT (CLAMP)	J2(1a-A5-2)	1	128750		100	300					Guide
	2"-HPS-85-201-D24-H6	CLAMP(Inch)	A5-2(2)	2									
		ANGLE STEEL L80X80X7		3.5m	128750								
85J2613	1"-NG-85-206/207/208/209-B50-N	"U" BOLT(Inch)[I]	A1-2(1)[I]	4	131750								Guide,Page 23
	1"-NG-85-211/212/213/214-B50-N	"U" BOLT(Inch)[I]	A1-2(1)[I]	4	131750								Guide
	1"-NG-85-202-B24-N	"U" BOLT(Inch)[I]	A1-2(1)[I]	1									Guide
	4"-FLG-85-201-B24-P8	"U" BOLT(Inch)[I]	A1-2(4)[I]	1	131750								Guide
	2"-HPS-85-201-D24-H6	GUIDE SUPPORT [II]	E5 [II]	1	131750		80						Guide
	2"-HPS-85-201-D24-H6	"T" SHOE SUPPORT (CLAMP)	J2(1a-A5-2)	1	131750		100	300					Guide
	2"-HPS-85-201-D24-H6	CLAMP(Inch)	A5-2(2)	2									
		ANGLE STEEL L80X80X7		3.5m	131750								
85J2614	1"-NG-85-206/207/208/209-B50-N	"U" BOLT(Inch)[I]	A1-2(1)[I]	4	134750								Guide,Page 23
	1"-NG-85-211/212/213/214-B50-N	"U" BOLT(Inch)[I]	A1-2(1)[I]	4	134750								Guide
	1"-NG-85-202-B24-N	"U" BOLT(Inch)[I]	A1-2(1)[I]	1									Guide
	4"-FLG-85-201-B24-P8	"U" BOLT(Inch)[II]	A1-2(4)[II]	1	134750								Anchor
	2"-HPS-85-201-D24-H6	"T" SHOE SUPPORT (WELDING)	J1(1a)	1	134750		100	300					Anchor
		ANGLE STEEL L80X80X7		3.5m	134750								

Item No.	Line No.	SUPPORT NAME	MARK NO.	QTY	El.(mm)		Size(mm)						Remark
					I	II	A	B	C	D	E	F	
85J2615	1"-NG-85-206/207/208/209-B50-N	"U" BOLT(Inch)[I]	A1-2(1)[I]	4	134750								Guide,Page 23
	1"-NG-85-211/212/213/214-B50-N	"U" BOLT(Inch)[I]	A1-2(1)[I]	4	134750								Guide
	1"-NG-85-202-B24-N	"U" BOLT(Inch)[I]	A1-2(1)[I]	1									Guide
	4"-FLG-85-201-B24-P8	"U" BOLT(Inch)[I]	A1-2(4)[I]	1	137750								Guide
	2"-HPS-85-201-D24-H6	GUIDE SUPPORT [II]	E5 [II]	1	137750		80						Guide
	2"-HPS-85-201-D24-H6	"T" SHOE SUPPORT (CLAMP)	J2(1a-A5-2)	1	137750		100	300					Guide
	2"-HPS-85-201-D24-H6	CLAMP(Inch)	A5-2(2)	2									
		ANGLE STEEL L80X80X7		3.5m	137750								
85J2616	1"-NG-85-206/207/208/209-B50-N	"U" BOLT(Inch)[I]	A1-2(1)[I]	4	140750								Guide,Page 23
	1"-NG-85-211/212/213/214-B50-N	"U" BOLT(Inch)[I]	A1-2(1)[I]	4	140750								Guide
	1"-NG-85-202-B24-N	"U" BOLT(Inch)[I]	A1-2(1)[I]	1									Guide
	4"-FLG-85-201-B24-P8	"U" BOLT(Inch)[I]	A1-2(4)[I]	1	140750								Guide
	2"-HPS-85-201-D24-H6	GUIDE SUPPORT [II]	E5 [II]	1	140750		80						Guide
	2"-HPS-85-201-D24-H6	"T" SHOE SUPPORT (CLAMP)	J2(1a-A5-2)	1	140750		100	300					Guide
	2"-HPS-85-201-D24-H6	CLAMP(Inch)	A5-2(2)	2									
		ANGLE STEEL L80X80X7		3.5m	140750								
85J2617	1"-NG-85-206/207/208/209-B50-N	"U" BOLT(Inch)[I]	A1-2(1)[I]	4	143750								Guide,Page 23
	1"-NG-85-211/212/213/214-B50-N	"U" BOLT(Inch)[I]	A1-2(1)[I]	4	143750								Guide
	1"-NG-85-202-B24-N	"U" BOLT(Inch)[I]	A1-2(1)[I]	1									Guide
	4"-FLG-85-201-B24-P8	"U" BOLT(Inch)[I]	A1-2(4)[I]	1	143750								Guide
	2"-HPS-85-201-D24-H6	GUIDE SUPPORT [II]	E5 [II]	1	143750		80						Guide
	2"-HPS-85-201-D24-H6	"T" SHOE SUPPORT (CLAMP)	J2(1a-A5-2)	1	143750		100	300					Guide
	2"-HPS-85-201-D24-H6	CLAMP(Inch)	A5-2(2)	2									
		ANGLE STEEL L80X80X7		3.5m	143750								
85J2618	1"-NG-85-206/207/208/209-B50-N	"U" BOLT(Inch)[I]	A1-2(1)[I]	4	146750								Guide,Page 23
	1"-NG-85-211/212/213/214-B50-N	"U" BOLT(Inch)[I]	A1-2(1)[I]	4	146750								Guide
	1"-NG-85-202-B24-N	"U" BOLT(Inch)[I]	A1-2(1)[I]	1									Guide
	4"-FLG-85-201-B24-P8	"U" BOLT(Inch)[I]	A1-2(4)[I]	1	146750								Guide
	2"-HPS-85-201-D24-H6	GUIDE SUPPORT [II]	E5 [II]	1	146750		80						Guide
	2"-HPS-85-201-D24-H6	"T" SHOE SUPPORT (CLAMP)	J2(1a-A5-2)	1	146750		100	300					Guide
	2"-HPS-85-201-D24-H6	CLAMP(Inch)	A5-2(2)	2									
		ANGLE STEEL L80X80X7		3.5m	146750								

Item No.	Line No.	SUPPORT NAME	MARK NO.	QTY	El.(mm)		Size(mm)						Remark
					I	II	A	B	C	D	E	F	
85J2619	1"-NG-85-206/207/208/209-B50-N	"U" BOLT(Inch)[I]	A1-2(1)[I]	4	150500								Guide,Page 23
	1"-NG-85-211/212/213/214-B50-N	"U" BOLT(Inch)[I]	A1-2(1)[I]	4	150500								Guide
	2"-HPS-85-201-D24-H6	GUIDE SUPPORT [II]	E5 [II]	1	147750		80						Guide
	2"-HPS-85-201-D24-H6	"T" SHOE SUPPORT (CLAMP)	J2(1a-A5-2)	1	147750		100	300					Guide
	2"-HPS-85-201-D24-H6	CLAMP(Inch)	A5-2(2)	2									
		ANGLE STEEL L80X80X7		3.5m	150500								
85J2620	1"-NG-85-206/207/208/209-B50-N	"U" BOLT(Inch)[I]	A1-2(1)[I]	4	152500								Anchor,Page 23
	1"-NG-85-211/212/213/214-B50-N	"U" BOLT(Inch)[I]	A1-2(1)[I]	4	152500								Anchor
	2"-HPS-85-201-D24-H6	GUIDE SUPPORT [II]	E5 [II]	1	152750		80						Guide
	2"-HPS-85-201-D24-H6	"T" SHOE SUPPORT (CLAMP)	J2(1a-A5-2)	1	152750		100	300					Guide
	2"-HPS-85-201-D24-H6	CLAMP(Inch)	A5-2(2)	2									
		ANGLE STEEL L80X80X7		3.5m	152500								

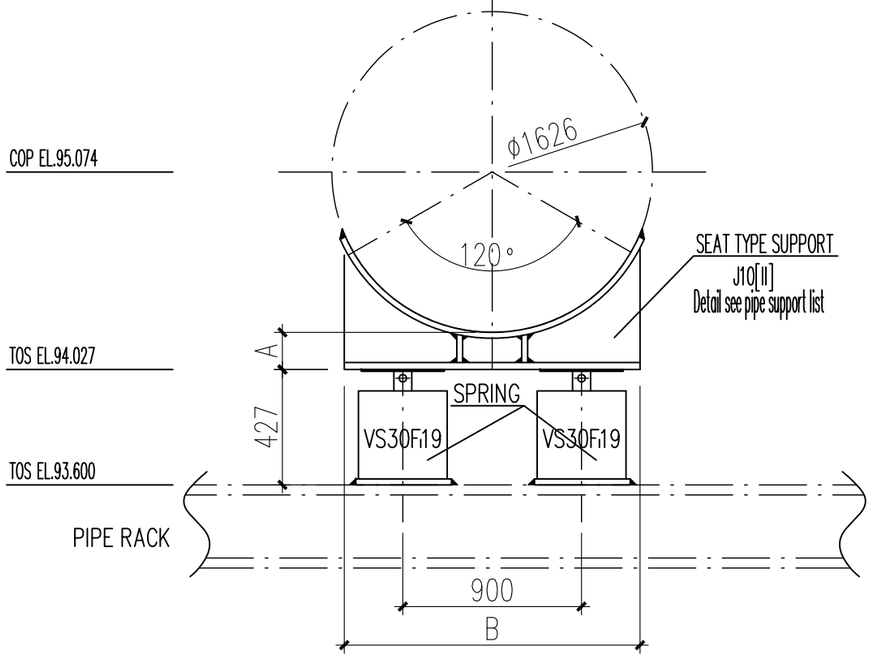

INSTALLATION DIAGRAM

85J0104

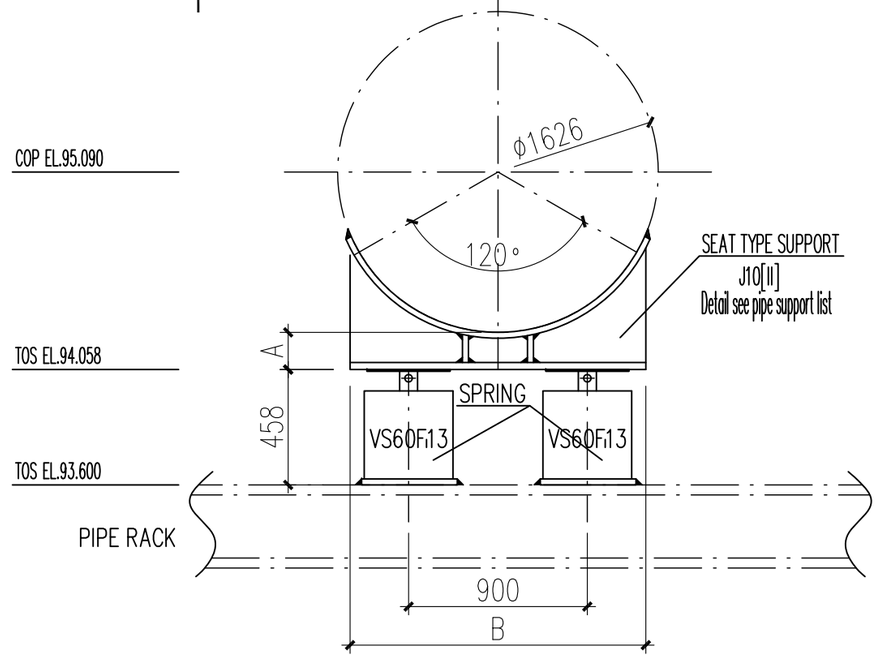

INSTALLATION DIAGRAM

85J0105

PARAMETERS OF SPRING

SUPPORT No.	SPRING TYPE	INSTALLATION LOAD	OPERATION LOAD	DISPLACEMENT(mm)		SPRING INSTALLATION HEIGHT	QUANTITY	STANDARD
		N	N	VERTICAL	HORIZONTAL	mm	set	
85J0104	VS30F19	52500	44350	10	35	427	2	HG/T20644-1998
85J0105	VS60F13	11140	10000	15	23	458	2	HG/T20644-1998

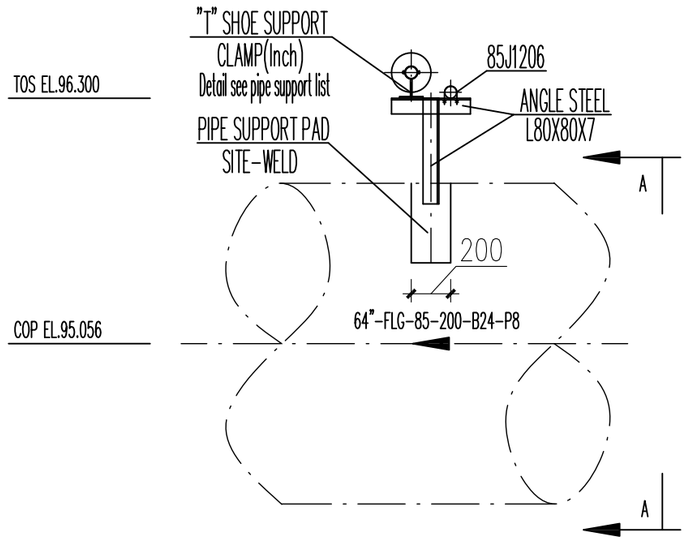

INSTALLATION DIAGRAM

85J0418/85J1206

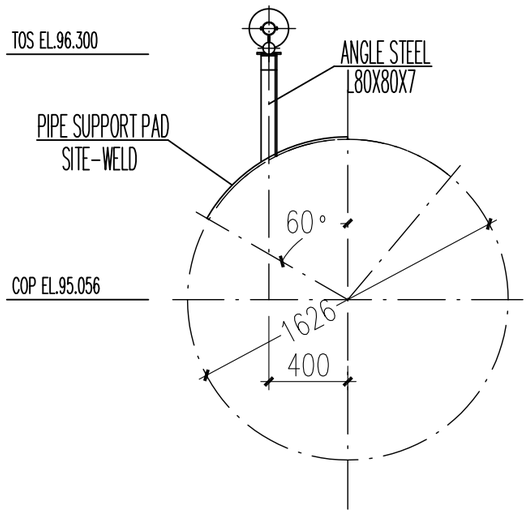

VIEW A-A

GENERAL NOTES

GENERAL NOTE:

1.ALL DIMENSIONS ARE IN mm. ALL ELEVATIONS AND COORDINATES ARE IN m.

2.DELETE.

3.THE SITE WELDING OF BRACKET AND CIVIL SHALL BE FULLY WELDED AND THE HEIGHT OF WELDING ANGLE SHOULD BE NO LESS THAN THE THICKNESS OF THINNER PART.

4.AFTER THE BRACKET IS INSTALLED,PAINTING IS NEEDED.

5.FOR STAINESS PIPE,A THICKNESS≥0.3mm STAINESS PLATE SHOULD BE INSTALLED BETWEEN PIPE AND CLAMP OR U BOLT.

6.FOR SEAT TYPE SUPPORT,THE DISCONTINUOUS ARC WELDING BETWEEN THE ARC PLATE AND THE PIPE OF THE SLIDING TUBE IS 100mm,AND THE FIXED PIPE BRACKET IS FULL WELDED.

REFERENCE DRAWINGS

SYMBOLS AND LEGENDS

KEY PLAN

REV.	DESCRIPTION	DATE	DESIGN	DRAW	CHECK	REVIEW	APPROVE
A	Final Issue	29.11.2018	Geng Yunfei		Bai Yang	Ji Ningbo	
A	Final Issue	08.11.2018	Geng Yunfei		Bai Yang	Ji Ningbo	
A	Final Issue	14.12.2017	Geng Yunfei		Bai Yang	Ji Ningbo	
A	Issued For Review	07.11.2017	Geng Yunfei		Bai Yang	Ji Ningbo	
A	Issued For Review	17.07.2017	Geng Yunfei		Bai Yang	Ji Ningbo	

THIS DOCUMENT IS THE PROPERTY OF TCC. NO PART OF THIS DOCUMENT SHALL BE REPRODUCED OR DISCLOSED TO OTHERS OR USED FOR ANY PURPOSE WHATSOEVER EXCEPT WITH THE PRIOR WRITTEN PERMISSION OF TCC.

OWNER: Middle East Kimiaye Pars Company

HALDOR TOPSØE A/S

CONTRACTOR: 中国天辰工程有限公司 CHINA TIANCHEN ENGINEERING CORPORATION

CONTRACTOR DRAWING NO. MKP-11-DE-9000-FE-REQ-237 SHEET 19 TOTAL 24

VENDOR: 江苏中圣高科技产业有限公司 JIANGSU SUNPOWER TECHNOLOGY CO., LTD

VENDOR DRAWING NO. 17013D85000PE00-13 SHEET 19 TOTAL 24

Pipe Support List

PROJECT	MKP Methanol Project
UNIT	Flare
PHASE	Detail Engineering
OWNER DWG NO.	MKP-VD-8500-237-507-A3

SCALE 1:15 | SHEET 19 | TOT. 24 | SIZE A3

Counter Signing | Sign | Date

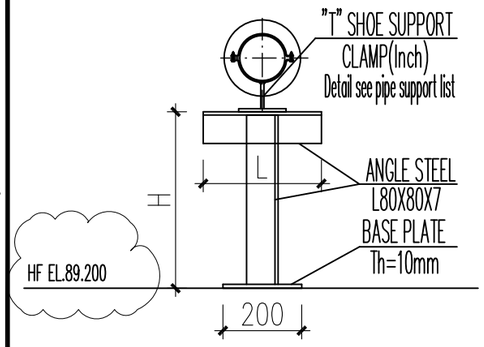

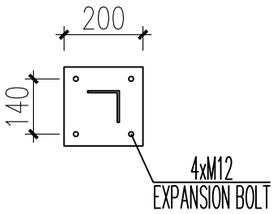

DETAIL OF BASE PLATE

PARAMETERS OF PIPE SUPPORT					
SUPPORT No.	SIZE		SUPPORT No.	SIZE	
	H(mm)	L(mm)		H(mm)	L(mm)
85J0203	1300	200	85J0504	683	200
85J0204	100	200	85J0505	683	200
85J0303	670	200	85J0506	683	200
85J0304	670	200	85J0602	183	200
85J0305	557	200	85J0704	450	200
85J0306	670	200	85J0705	450	200
85J0401	670	200	85J1401	450	200
85J0403	670	200	85J1402	450	200
85J0408	670	200	85J2501	436	200
85J0413	557	200	85J2502	436	200
85J0414	557	200	85J2503	436	200
85J0502	683	200	85J2504	436	200
85J0503	683	200	85J2505	436	200

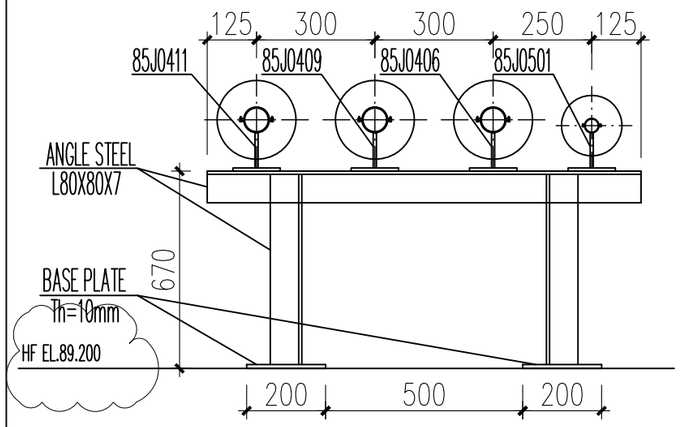

INSTALLATION DIAGRAM

85J0406/85J0409/85J0411/85J0501

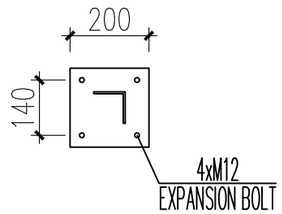

DETAIL OF BASE PLATE

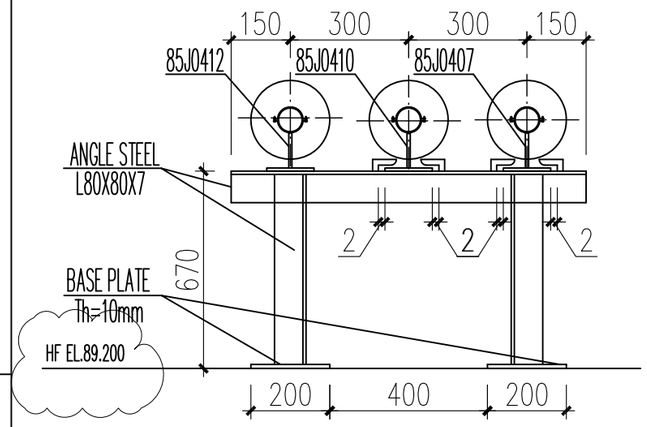

INSTALLATION DIAGRAM

85J0407/85J0410/85J0412

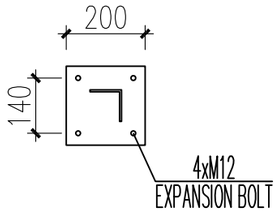

DETAIL OF BASE PLATE

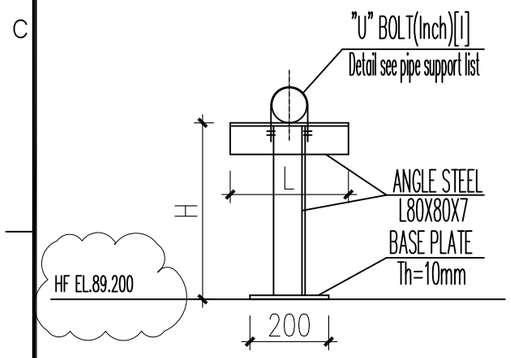

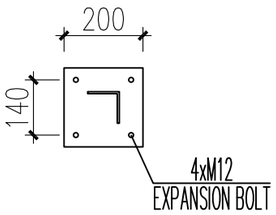

DETAIL OF BASE PLATE

PARAMETERS OF PIPE SUPPORT					
SUPPORT No.	SIZE		SUPPORT No.	SIZE	
	H(mm)	L(mm)		H(mm)	L(mm)
85J1001	536	150	85J1201	551	100
85J1102	564	100	85J1202	551	100
85J1103	564	100			

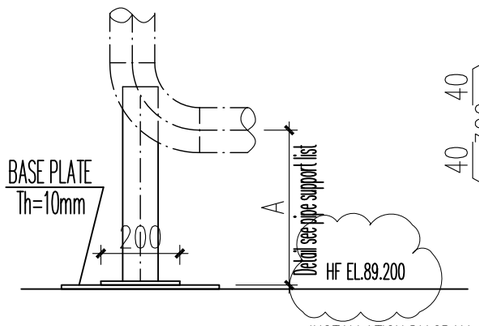

INSTALLATION DIAGRAM

85J0302/85J0404

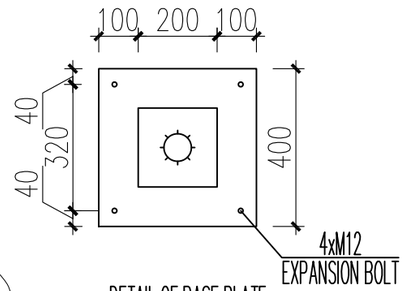

DETAIL OF BASE PLATE

GENERAL NOTES

GENERAL NOTE:

1.ALL DIMENSIONS ARE IN mm. ALL ELEVATIONS AND COORDINATES ARE IN m.

2.DELETE.

3.THE SITE WELDING OF BRACKET AND CIVIL SHALL BE FULLY WELDED AND THE HEIGHT OF WELDING ANGLE SHOULD BE NO LESS THAN THE THICKNESS OF THINNER PART.

4.AFTER THE BRACKET IS INSTALLED,PAINTING IS NEEDED.

5.FOR STAINESS PIPE,A THICKNESS≥0.3mm STAINESS PLATE SHOULD BE INSTALLED BETWEEN PIPE AND CLAMP OR U BOLT.

REFERENCE DRAWINGS

SYMBOLS AND LEGENDS

KEY PLAN

REV.	DESCRIPTION	DATE	DESIGN	DRAW	CHECK	REVIEW	APPROVE
A	Final Issue	29.11.2018	Geng Yunfei		Bai Yang	Ji Ningbo	
A	Final Issue	08.11.2018	Geng Yunfei		Bai Yang	Ji Ningbo	
A	Final Issue	14.12.2017	Geng Yunfei		Bai Yang	Ji Ningbo	
A	Issued For Review	07.11.2017	Geng Yunfei		Bai Yang	Ji Ningbo	
A	Issued For Review	17.07.2017	Geng Yunfei		Bai Yang	Ji Ningbo	

THIS DOCUMENT IS THE PROPERTY OF TCC. NO PART OF THIS DOCUMENT SHALL BE REPRODUCED OR DISCLOSED TO OTHERS OR USED FOR ANY PURPOSE WHATSOEVER EXCEPT WITH THE PRIOR WRITTEN PERMISSION OF TCC.

OWNER: Middle East Kimiaye Pars Company

HALDOR TOPSØE A/S

CONTRACTOR: 中国天辰工程有限公司 CHINA TIANCHEN ENGINEERING CORPORATION

CONTRACTOR DRAWING NO. MKP-11-DE-9000-FE-REQ-237 SHEET 20 TOTAL 24

VENDOR: 江苏中圣高科技产业有限公司 JIANGSU SUNPOWER TECHNOLOGY CO., LTD

VENDOR DRAWING NO. 17013D85000PE00-13 SHEET 20 TOTAL 24

Pipe Support List

PROJECT	MKP Methanol Project
UNIT	Flare
PHASE	Detail Engineering
OWNER DWG NO.	MKP-VD-8500-237-507-A3

SCALE 1:15 | SHEET 20 | TOT. 24 | SIZE A3

Counter Signing	Sign	Date

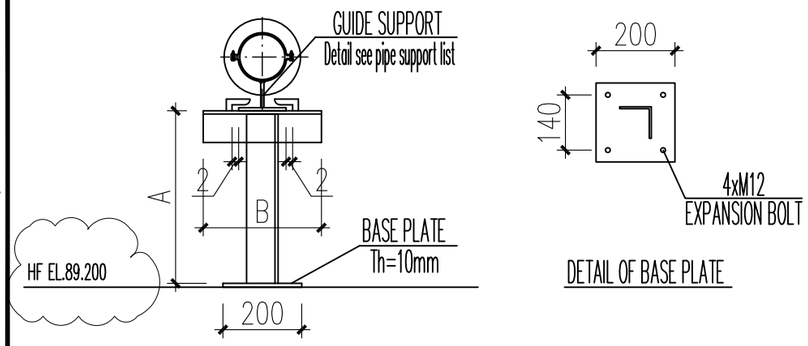

DETAIL OF BASE PLATE

INSTALLATION DIAGRAM

85J0206/85J0401a

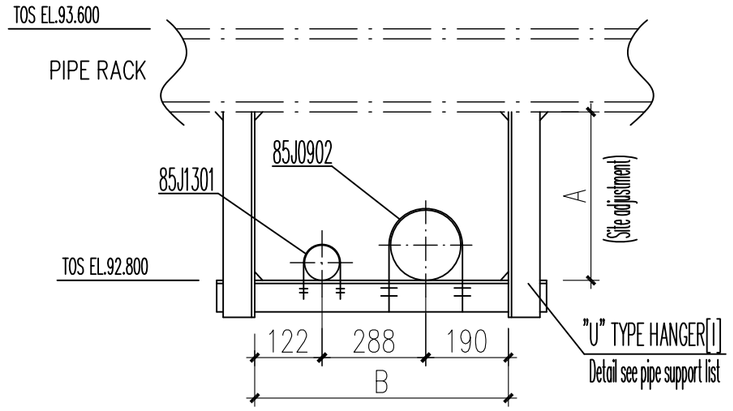

INSTALLATION DIAGRAM

85J0902/85J1301

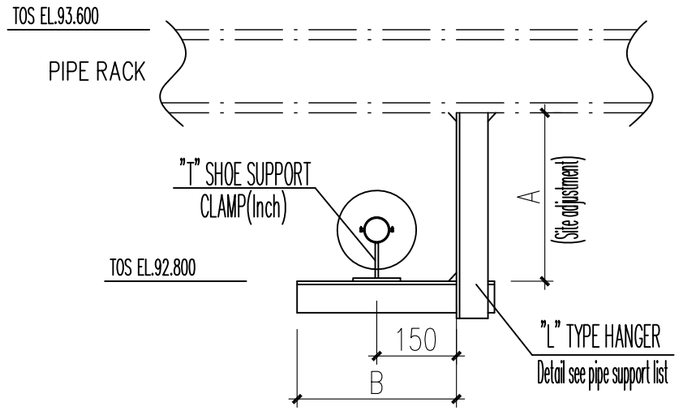

INSTALLATION DIAGRAM

85J0415

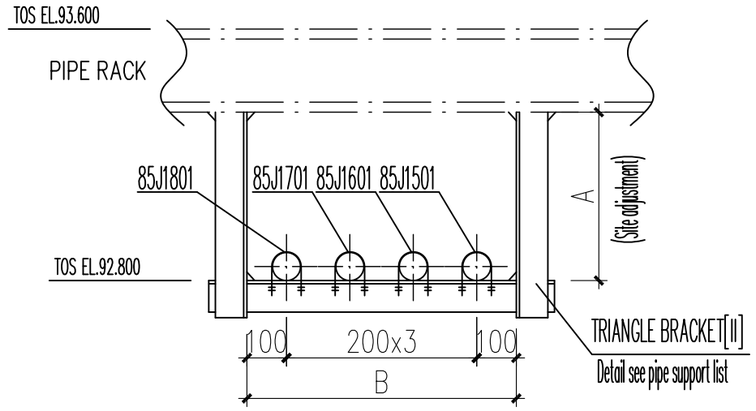

INSTALLATION DIAGRAM

85J1501/85J1601/85J1701/85J1801

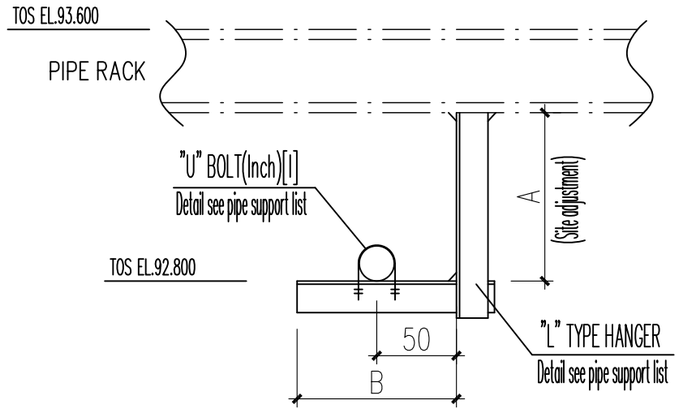

INSTALLATION DIAGRAM

85J1103

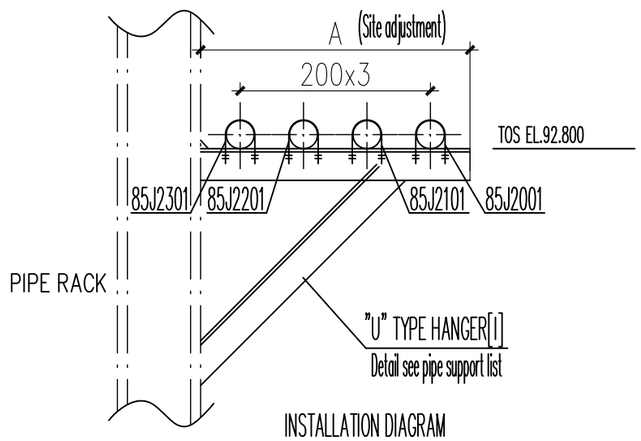

INSTALLATION DIAGRAM

85J2001/85J2101/85J2201/85J2301

GENERAL NOTES

GENERAL NOTE:

1.ALL DIMENSIONS ARE IN mm. ALL ELEVATIONS AND COORDINATES ARE IN m.

2.DELETE.

3.THE SITE WELDING OF BRACKET AND CIVIL SHALL BE FULLY WELDED AND THE HEIGHT OF WELDING ANGLE SHOULD BE NO LESS THAN THE THICKNESS OF THINNER PART.

4.AFTER THE BRACKET IS INSTALLED,PAINTING IS NEEDED.

5.FOR STAINESS PIPE,A THICKNESS≥0.3mm STAINESS PLATE SHOULD BE INSTALLED BETWEEN PIPE AND CLAMP OR U BOLT.

REFERENCE DRAWINGS

SYMBOLS AND LEGENDS

KEY PLAN

REV.	DESCRIPTION	DATE	DESIGN	DRAW	CHECK	REVIEW	APPROVE
A	Final Issue	29.11.2018	Geng Yunfei		Bai Yang	Ji Ningbo	
A	Final Issue	08.11.2018	Geng Yunfei		Bai Yang	Ji Ningbo	
A	Final Issue	14.12.2017	Geng Yunfei		Bai Yang	Ji Ningbo	
A	Issued For Review	07.11.2017	Geng Yunfei		Bai Yang	Ji Ningbo	
A	Issued For Review	17.07.2017	Geng Yunfei		Bai Yang	Ji Ningbo	

THIS DOCUMENT IS THE PROPERTY OF TCC. NO PART OF THIS DOCUMENT SHALL BE REPRODUCED OR DISCLOSED TO OTHERS OR USED FOR ANY PURPOSE WHATSOEVER EXCEPT WITH THE PRIOR WRITTEN PERMISSION OF TCC.

OWNER:

Middle East Kimiaye Pars Company

HALDOR TOPSØE A/S

CONTRACTOR: 中国天辰工程有限公司 CHINA TIANCHEN ENGINEERING CORPORATION

CONTRACTOR DRAWING NO. MKP-11-DE-9000-FE-REQ-237 SHEET 21 TOTAL 24

VENDOR: 江苏中圣高科技产业有限公司 JIANGSU SUNPOWER TECHNOLOGY CO., LTD

VENDOR DRAWING NO. 17013D85000PE00-13 SHEET 21 TOTAL 24

Pipe Support List

PROJECT	MKP Methanol Project
UNIT	Flare
PHASE	Detail Engineering
OWNER DWG NO.	MKP--VD-8500-237-507-A3

SCALE 1:15 | SHEET 21 | TOT. 24 | SIZE A3

Counter Signing	Sign	Date

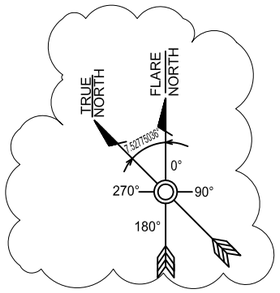

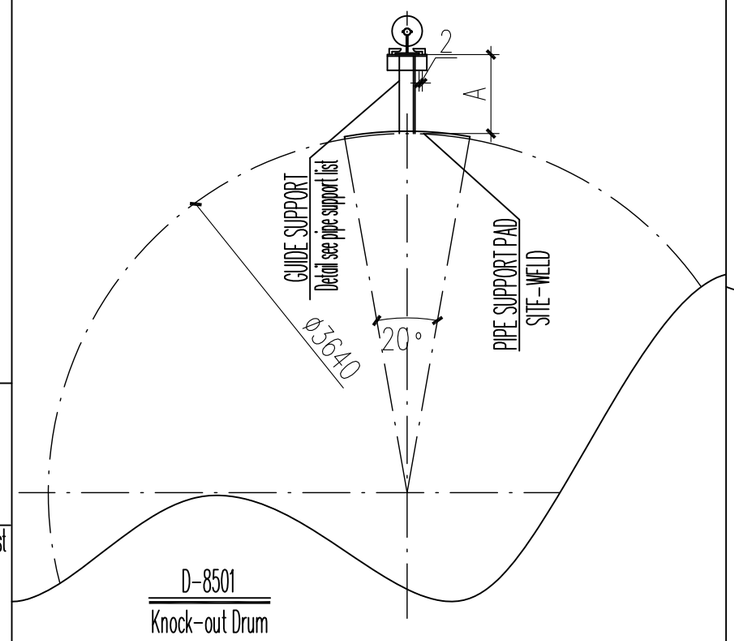

INSTALLATION DIAGRAM
85J0601

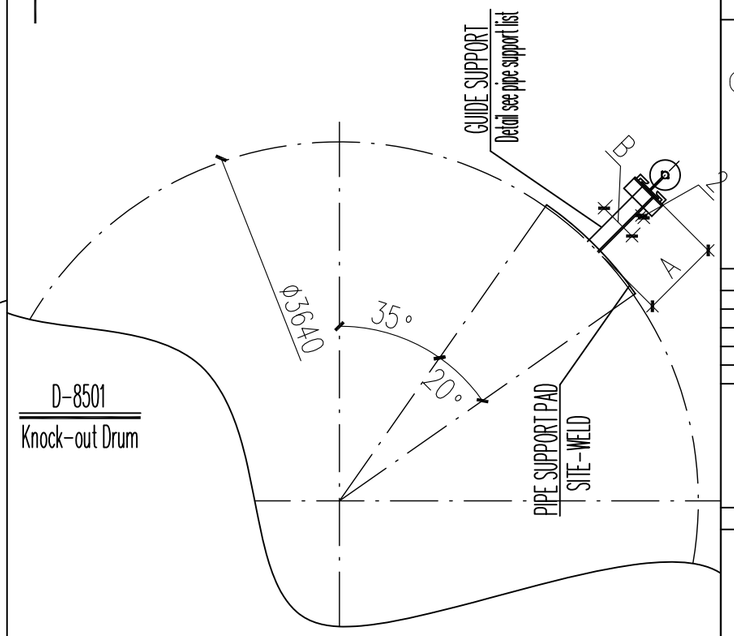

INSTALLATION DIAGRAM
85J0507

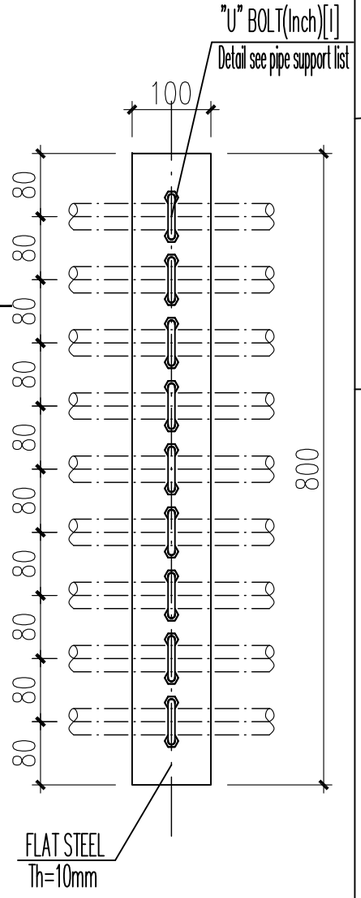

INSTALLATION DIAGRAM
85J2601

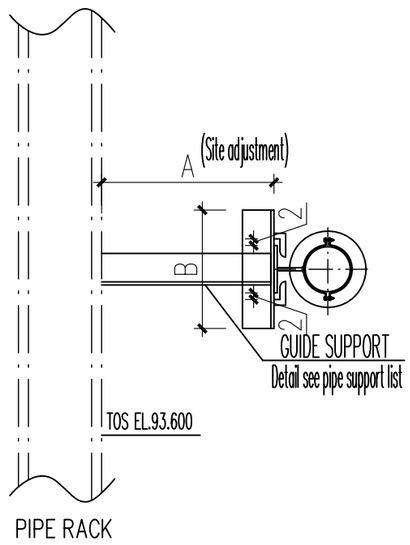

INSTALLATION DIAGRAM
85J0405

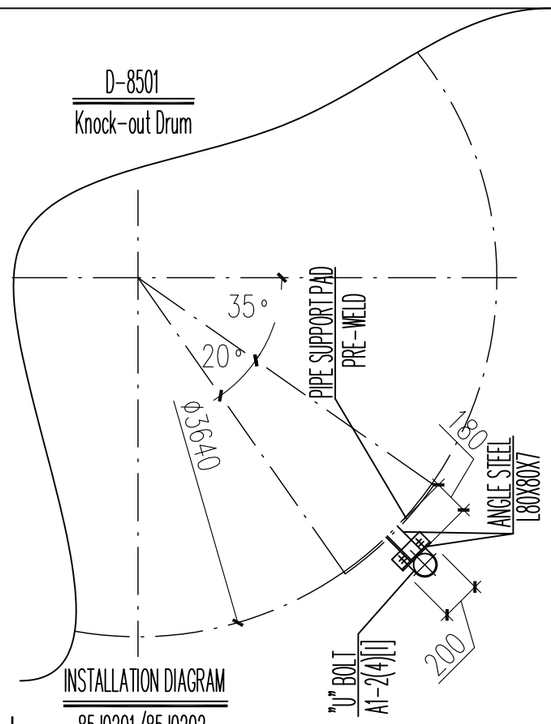

INSTALLATION DIAGRAM
85J0201/85J0202

GENERAL NOTES

GENERAL NOTE:

1.ALL DIMENSIONS ARE IN mm. ALL ELEVATIONS AND COORDINATES ARE IN m.

2.DELETE.

3.THE SITE WELDING OF BRACKET AND CIVIL SHALL BE FULLY WELDED AND THE HEIGHT OF WELDING ANGLE SHOULD BE NO LESS THAN THE THICKNESS OF THINNER PART.

4.AFTER THE BRACKET IS INSTALLED,PAINTING IS NEEDED.

5.FOR STAINESS PIPE,A THICKNESS≥0.3mm S.S PLATE SHOULD BE INSTALLED BETWEEN PIPE AND CLAMP OR U BOLT.

REFERENCE DRAWINGS

SYMBOLS AND LEGENDS

KEY PLAN

REV.	DESCRIPTION	DATE	DESIGN	DRAW	CHECK	REVIEW	APPROVE
A	Final Issue	29.11.2018	Geng Yunfei		Bai Yang	Ji Ningbo	
A	Final Issue	05.11.2018	Geng Yunfei		Bai Yang	Ji Ningbo	
A	Final Issue	14.12.2017	Geng Yunfei		Bai Yang	Ji Ningbo	
A	Issued For Review	07.11.2017	Geng Yunfei		Bai Yang	Ji Ningbo	
A	Issued For Review	17.07.2017	Geng Yunfei		Bai Yang	Ji Ningbo	

THIS DOCUMENT IS THE PROPERTY OF TCC. NO PART OF THIS DOCUMENT SHALL BE REPRODUCED OR DISCLOSED TO OTHERS OR USED FOR ANY PURPOSE WHATSOEVER EXCEPT WITH THE PRIOR WRITTEN PERMISSION OF TCC.

OWNER: Middle East Kimlaye Pars Company

HALDOR TOPSØE A/S

CONTRACTOR: TCC 中国天辰工程有限公司 CHINA TIANCHEN ENGINEERING CORPORATION

CONTRACTOR DRAWING NO. MKP-11-DE-9000-FE-REQ-237 SHEET 22 TOTAL 24

VENDOR: SUNPOWER 江苏中圣高科技产业有限公司 JIANGSU SUNPOWER TECHNOLOGY CO., LTD

VENDOR DRAWING NO. 17013D85000PE00-13 SHEET 22 TOTAL 24

Pipe Support List

PROJECT	MKP Methanol Project
UNIT	Flare
PHASE	Detail Engineering
OWNER DWG NO.	MKP-VD-8500-237-507-A3

SCALE 1:15 | SHEET 22 | TOT. 24 | SIZE A3

Counter Signing | Sign | Date

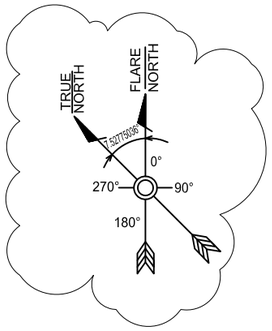

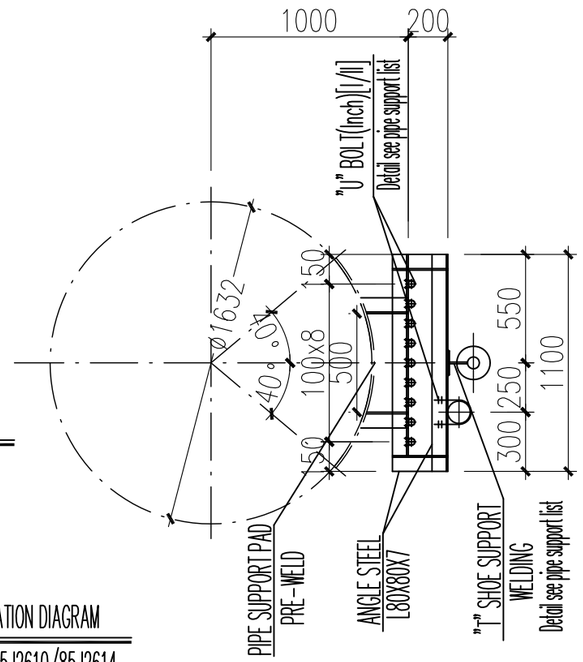

FL-8501
Flare Stack

INSTALLATION DIAGRAM
85J2605/85J2610/85J2614

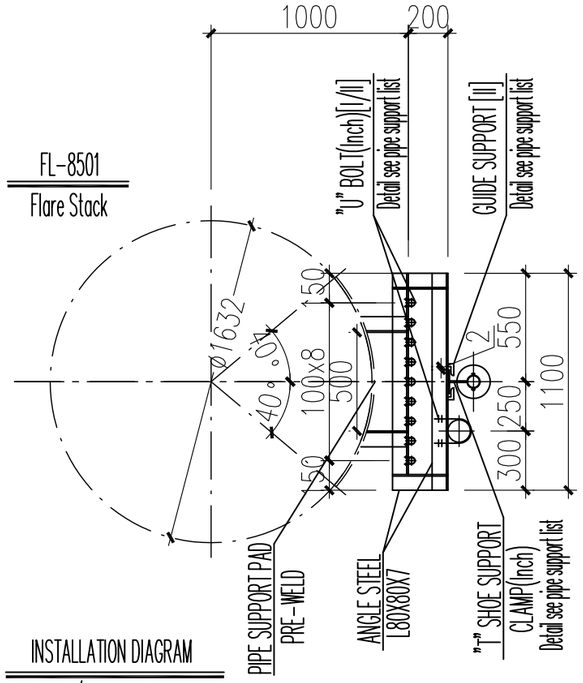

FL-8501
Flare Stack

INSTALLATION DIAGRAM
85J2604/85J2606~85J2609
85J2611~85J2613/85J2615~85J2618

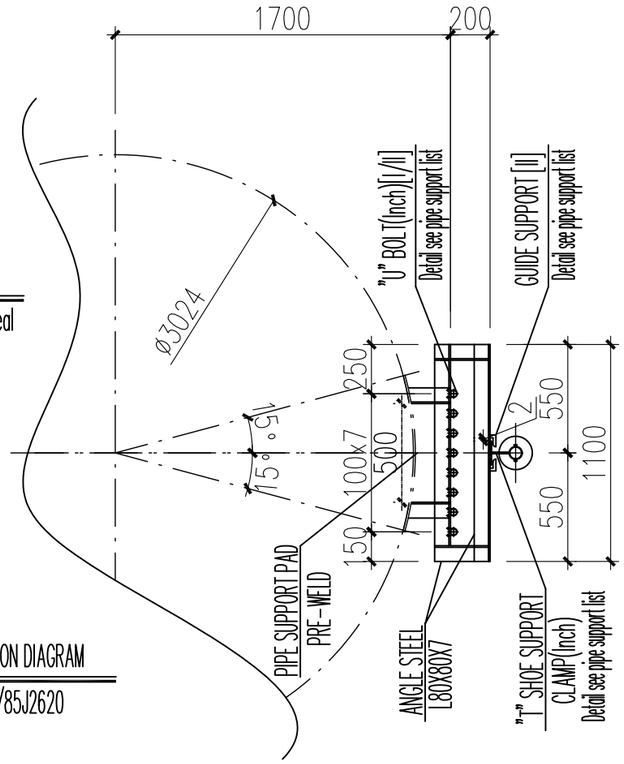

FL-8503
Molecular Seal

INSTALLATION DIAGRAM
85J2619/85J2620

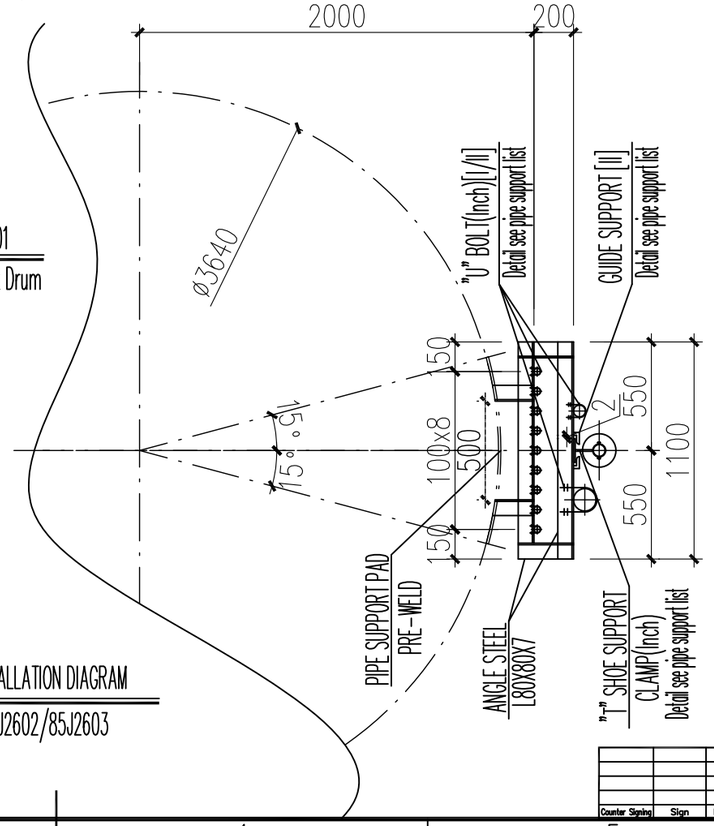

D-8501
Knock-out Drum

INSTALLATION DIAGRAM
85J2602/85J2603

GENERAL NOTES

GENERAL NOTE:

1.ALL DIMENSIONS ARE IN mm. ALL ELEVATIONS AND COORDINATES ARE IN m.

2.DELETE.

3.THE SITE WELDING OF BRACKET AND CIVIL SHALL BE FULLY WELDED AND THE HEIGHT OF WELDING ANGLE SHOULD BE NO LESS THAN THE THICKNESS OF THINNER PART.

4.AFTER THE BRACKET IS INSTALLED,PAINTING IS NEEDED.

5.FOR STAINESS PIPE,A THICKNESS≥0.3mm S.S PLATE SHOULD BE INSTALLED BETWEEN PIPE AND CLAMP OR U BOLT.

REFERENCE DRAWINGS

SYMBOLS AND LEGENDS

KEY PLAN

REV.	DESCRIPTION	DATE	DESIGN	DRAW	CHECK	REVIEW	APPROVE
A	Final Issue	29.11.2018	Geng Yunfei		Bai Yang	Ji Ningbo	
A	Final Issue	08.11.2018	Geng Yunfei		Bai Yang	Ji Ningbo	
A	Final Issue	14.12.2017	Geng Yunfei		Bai Yang	Ji Ningbo	
A	Issued For Review	07.11.2017	Geng Yunfei		Bai Yang	Ji Ningbo	
A	Issued For Review	17.07.2017	Geng Yunfei		Bai Yang	Ji Ningbo	

THIS DOCUMENT IS THE PROPERTY OF TCC. NO PART OF THIS DOCUMENT SHALL BE REPRODUCED OR DISCLOSED TO OTHERS OR USED FOR ANY PURPOSE WHATSOEVER EXCEPT WITH THE PRIOR WRITTEN PERMISSION OF TCC.

OWNER:
Middle East Kimiaye Pars Company

HALDOR TOPSØE A/S

CONTRACTOR: 中国天辰工程有限公司 CHINA TIANCHEN ENGINEERING CORPORATION

VENDOR: 江苏中圣高科技产业有限公司 JIANGSU SUNPOWER TECHNOLOGY CO., LTD

CONTRACTOR DRAWING NO.	MKP-11-DE-9000-FE-REQ-237
SHEET 23	TOTAL 24
VENDOR DRAWING NO.	17013D85000PE00-13
SHEET 23	TOTAL 24

Pipe Support List

PROJECT	MKP Methanol Project
UNIT	Flare
PHASE	Detail Engineering
OWNER DWG NO.	MKP-VD-8500-237-507-A3

SCALE 1:15 | SHEET 23 | TOT. 24 | SIZE A3

Counter Signing	Sign	Date

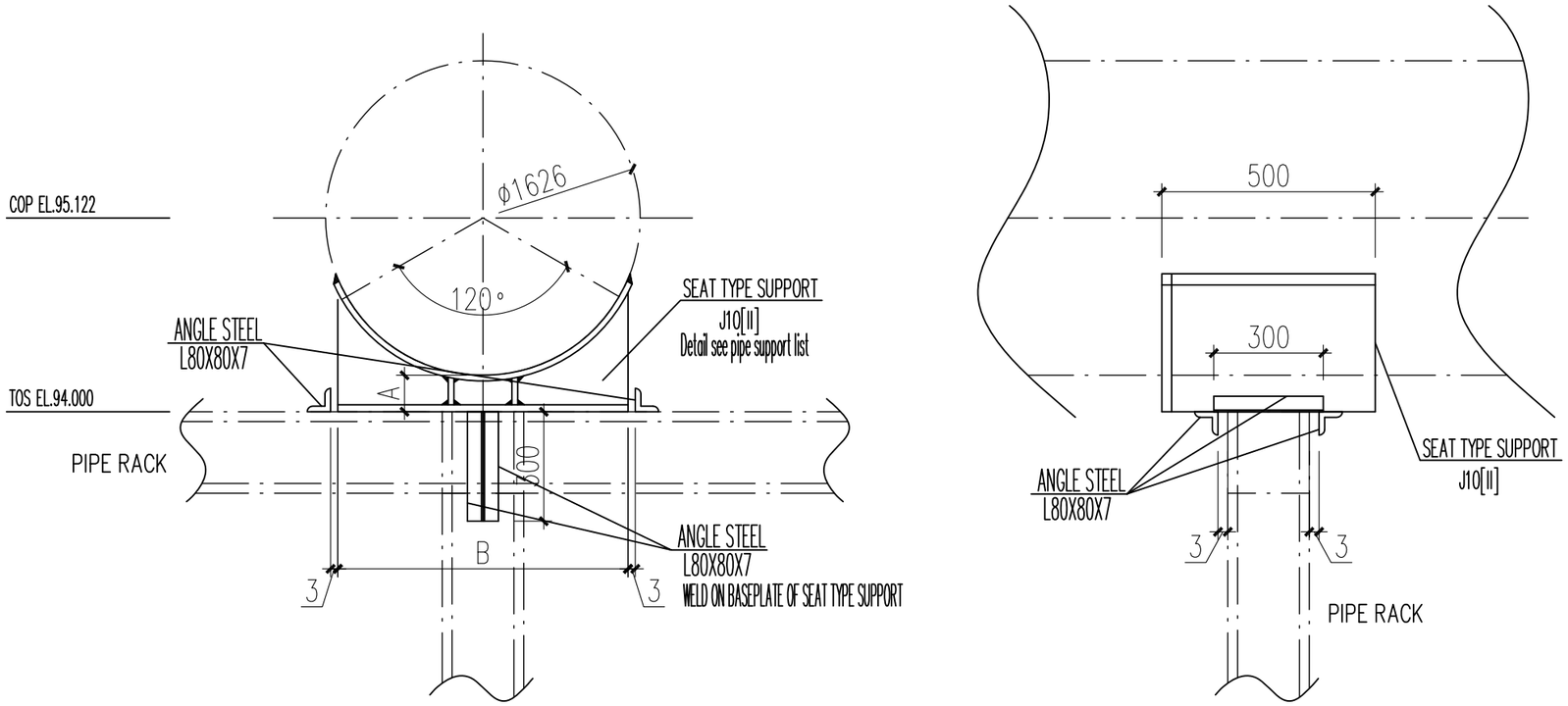

INSTALLATION DIAGRAM

85J0101

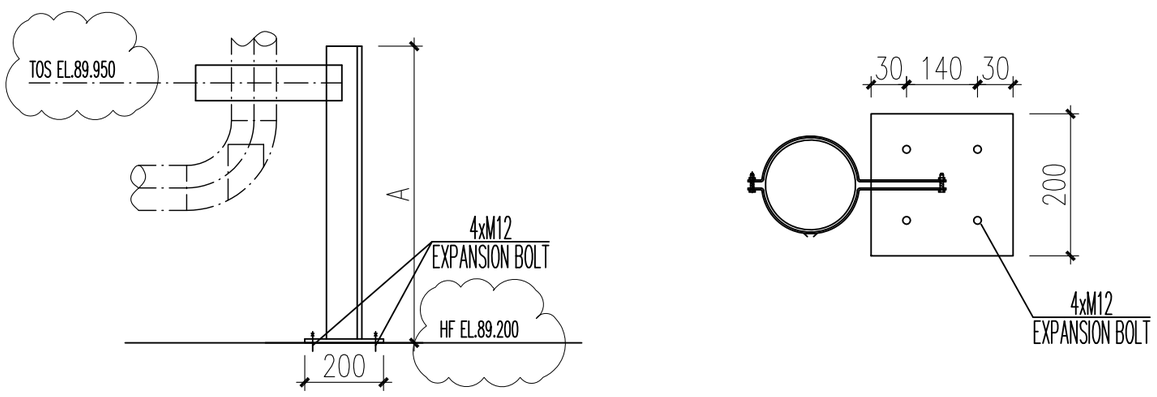

INSTALLATION DIAGRAM

85J0205

GENERAL NOTES

GENERAL NOTE:

1.ALL DIMENSIONS ARE IN mm. ALL ELEVATIONS AND COORDINATES ARE IN m.

2.DELETE.

3.THE SITE WELDING OF BRACKET AND CIVIL SHALL BE FULLY WELDED AND THE HEIGHT OF WELDING ANGLE SHOULD BE NO LESS THAN THE THICKNESS OF THINNER PART.

4.AFTER THE BRACKET IS INSTALLED,PAINTING IS NEEDED.

5.FOR STAINESS PIPE,A THICKNESS≥0.3mm STAINESS PLATE SHOULD BE INSTALLED BETWEEN PIPE AND CLAMP OR U BOLT.

6.FOR SEAT TYPE SUPPORT,THE DISCONTINUOUS ARC WELDING BETWEEN THE ARC PLATE AND THE PIPE OF THE SLIDING TUBE IS 100mm,AND THE FIXED PIPE BRACKET IS FULL WELDED.

REFERENCE DRAWINGS

SYMBOLS AND LEGENDS

KEY PLAN

REV.	DESCRIPTION	DATE	DESIGN	DRAW	CHECK	REVIEW	APPROVE
A	Final Issue	29.11.2018	Geng Yunfei		Bai Yang	Ji Ningbo	
A	Final Issue	08.11.2018	Geng Yunfei		Bai Yang	Ji Ningbo	
A	Final Issue	14.12.2017	Geng Yunfei		Bai Yang	Ji Ningbo	
A	Issued For Review	07.11.2017	Geng Yunfei		Bai Yang	Ji Ningbo	
A	Issued For Review	17.07.2017	Geng Yunfei		Bai Yang	Ji Ningbo	

THIS DOCUMENT IS THE PROPERTY OF TCC. NO PART OF THIS DOCUMENT SHALL BE REPRODUCED OR DISCLOSED TO OTHERS OR USED FOR ANY PURPOSE WHATSOEVER EXCEPT WITH THE PRIOR WRITTEN PERMISSION OF TCC.

OWNER:

Middle East
Kimiaye Pars Company

HALDOR TOPSØE A/S

CONTRACTOR: 中国天辰工程有限公司 CHINA TIANCHEN ENGINEERING CORPORATION

CONTRACTOR DRAWING NO.: MKP-11-DE-9000-FE-REQ-237

SHEET 24 TOTAL 24

VENDOR: 江苏中圣高科技产业有限公司 JIANGSU SUNPOWER TECHNOLOGY CO., LTD

VENDOR DRAWING NO.: 17013D85000PE00-13

SHEET 24 TOTAL 24

Pipe Support List

PROJECT	MKP Methanol Project
UNIT	Flare
PHASE	Detail Engineering
OWNER DWG NO.	MKP-VD-8500-237-507-A3

SCALE 1:15 | SHEET 24 | TOT. 24 | SIZE A3

Counter Signing	Sign	Date